Section

D

Flashing Light Highway Crossing Signals

WESTERN RAILROAD SUPPLY COMPANY

DIVISION OF WESTERN INDUSTRIES, INC.

MANUFACTURERS

GENERAL OFFICES and FACTORY

2742 WEST 36TH PLACE CHICAGO 32, ILLINOIS

District Offices in

NEW YORK 7 PHILADELPHIA 2 SAN FRANCISCO 5

ST. LOUIS 1 HOUSTON 23 MONTREAL 3

Printed in U.S.A.

3M-1960

Section D

CONTENTS

Speed Table for Crossing Signal Starts ..... Page 7

Flashing Light Signals with Medium Screw Base Lamp Receptacles ..... Plates D100 to D180A

Brackets for Off-set mounting of Flashing Light Units ..... Plates D295 and D297

Flashing Light Signals with Single Contact, Bayonet Base, Lamp Receptacles..... Plates D300 to D380A

Junctionbox Crossarms and Replacement Parts ..... Plate D390A

Detail Parts for Flashing Light Highway Crossing Signal Assemblies ..... Plate D420A

Illuminated STOP Signs ..... Plate D430A

NO TURN Signals and Signs ..... Plate D433

Marker Lights, Roundel Protectors and Phantom Suppressors ..... Plate D435A

Cantilever Type Flashing Light Signals ..... Plates D510 and D530

Detail Parts for Cantilever Type Signals ..... Plates D520 and D540

NOTE:

For ordering references for replacement parts for Crossing Signal Light Units and Junctionbox Crossarms of the designs no longer manufactured, see Catalog Section D, Part No. 2.

GENERAL INFORMATION

The Flashing Light Highway Crossing Signals as manufactured by the Western Railroad Supply Company represent the latest improvement in design and meet all A.A.R. Specifications.

Although there are innumerable combinations of signal Assemblies, the types illustrated in this catalog are most popular and meet most requirements. Each type of signal is available for One-Way or Two-Way Indication. The One-Way Indication signal is equipped with two crossing signal light units; the Two-Way Indication signal with four crossing signal light units.

The signals are furnished with either of two types of Crossing Signal Light Units. The Type 818 Light Units are equipped with a receptacle for Medium Screw Base electric lamps and the Type 950A Light Units have receptacles to accommodate Single Contact, Bayonet Base, electric lamps having light center length of 1 1/4 inch.

The Type 818 Crossing Signal Light Unit has a Parabolic Glass reflector with the medium screw base receptacle mounted in the center of the back of the reflector. This type light unit is designed for mounting on the Type 950-818 Junctionbox Crossarm or the Type 855-20 Bracket. It is generally used where signals are operated from commercial power source at commercial voltage.

The Type 950A-201 Crossing Signal Light Unit is constructed entirely of Aluminum and has a most efficient Mangin mirror type of glass reflector. The lamp receptable is supported by a formed metal bracket, fully insulated from the housing and so positioned as to insure exact focus of the lamp filament with relation to the reflector. The filament is also held in line with the side light openings which are fitted with clear glass discs, unless otherwise specified.

The Type 950-818 Junctionbox Crossarm is used for mounting Type 818-103 Light Units. Each Light Unit is suspended from the arm by an individual cast iron link, 1 inch in cross section. This link provides adjustment of the light beam alignment of each individual light unit in both the horizontal and vertical plane; each adjustment being independent of the other. Means for locking each adjustment in position is provided. The Crossing Signal Light Unit and Junctionbox Crossarm are so constructed that this small link is the weakest part of the assembly and it will be the first to break should a light unit be struck by the overhang of a truck body, thus limiting the possible damage. The links are replaceable at slight cost.

The Number 950 types of Junctionbox Crossarms are constructed of cast Aluminum and contain a six-unit terminal strip; 12 binding posts. Each Light Unit is attached to a suspension bracket which provides means of adjustment of the light beam alignment. Adjustment can be made of each light unit independently of the other units and the horizontal and vertical alignment can be adjusted and locked in place, independently.

Roundels furnished are the A. A. R. Standard, 8-3/8"diameter, Red, with photometric rating for color of 220-300. Listings on the several Plates, and below, show the types available. No. 5323 Roundels, recommended by the A. A. R., Signal Section, for general use, are furnished unless other type is specified on the order.

Phantom Suppressors and Adaptors can be supplied for application to the Type 950-201 Flashing Light Unit, for use in locations where the rising or the setting sun may cause reflected phantom indications. Information thereon will be furnished on request.

The NO TURN Signal, shown on Plate D495A, of this Catalog Section, is often used in conjunction with Flashing Light Signals at locations where mounting of additional flashing light units would not provide suitable added protection. It is the safest method of protecting traffic on a street or highway running parallel to a railroad without interfering with traffic not crossing the railroad.

No attempt has been made to show in this Catalog Section all possible combinations of Flashing Light Highway Crossing Signals. We will gladly furnish plans and information on any other type of signal not shown.

The Western Railroad Supply Company is the largest manufacturer of Highway-Railroad Grade Crossing Signals and Devices. Write for catalogs and Bulletins covering Crossing Gates, Combination Crossing Gate and Flashing Light Signals, Rotating Disc Signals, Crossing Bells and Crossing Signs, as well as Signaling, Telephone and Telegraph devides and accessories.

Note: Roundels Available for Flashing Lights Units are:
CL-17, 30° Horizontal Spread.
5319, 160° Horizontal Spread, 12° Down Deflection.
5321, 20° Deflecting.
5323, 30° Horizontal Spread, 15° Down Deflection.
5327, 20° Horizontal Spread, 32° Down Deflection.
5332, 70° Horizontal Spread.
5333, Diffusion-deflection Type, With Horizontal and Downward Spread.

INFORMATION DESIRED WITH INQUIRY FOR COMPLETE HIGHWAY CROSSING INSTALLATION

We are pleased to furnish engineering information and to quote on requirements for Highway Crossing Installations. Where possible, inquiries should be accompanied with a sketch, or, preferably, a scale track plan showing the location of the highway.

The following information is especially desired:

1 - Specify type of crossing signal:
(A) Standard Flashing Light, (B) Flashing Light with Illuminated STOP sign,. (C) Cantilever Type.

2 - Is "Railroad Crossing" sign required?*

3 - Is number of tracks sign required? If so, advise numeral*

4 - Is "Stop on Red Signal" sign required?**

5 - Advise maximum authorized speed of train movement. (AAR recommendation is 20 seconds warning for fastest train).

6 - What special operating conditions exist within the area?

7 - Specify whether there are any switches within the approach section.

8 - Specify if there is any signal equipment now in place which might be affected by this installation.

9 - Specify whether Diesel-Electric or electric propulsion railway.

10 - What electric power is available for operation of signals? If D. C., specify voltage; if A. C., specify voltage and frequency.

11 - Specify whether stand-by electric service is required. (Can continuity of available service be depended upon?).

12 - Specify weight and type of rail and whether four or six hole insulated rail joints.

13 - Specify if track ballast is rock, gravel, sand, cinders, or other material.

14 - State whether highway is paved. Width of highway or travelled portion. Specify class of paving.

* Available in cast iron, Reflector Unit Type, both synthetic enamel and vitreous enamel finish and Reflex-Reflecting Sheet Type, on either steel or aluminum.

** Not available in cast iron. Otherwise same as *.

Speed Table For Crossing Signal Starts

Seconds		10	15	20	25	30	35	40	45	50	55	60
Miles Per Hour	Feet Per Second	Distance Traveled in Feet *										
1	1.46	14.6	22.0	29.3	36.6	44.0	51.3	58.6	66.0	73.3	80.6	88.0
2	2.93	29.3	44.0	58.6	73.3	88.0	102.6	117.3	132.0	146.6	161.3	176.0
3	4.4	44	66	88	110	132	154	176	198	220	242	264
4	5.86	58.6	88	117.3	146.6	176	205.3	234.6	264	293.3	322.6	352
5	7.3	73	110	147	183	220	257	293	330	367	403	440
10	14.6	146	220	293	366	440	513	587	660	733	807	880
15	22.0	220	330	440	550	660	770	880	990	1,100	1,210	1,320
20	29.3	293	440	587	733	880	1,027	1,173	1,320	1,467	1,613	1,760
25	36.7	367	550	733	917	1,100	1,283	1,467	1,650	1,833	2,017	2,200
30	44.0	440	660	880	1,100	1,320	1,540	1,760	1,980	2,200	2,420	2,640
35	51.3	513	770	1,027	1,283	1,540	1,797	2,053	2,310	2,567	2,823	3,080
40	58.7	587	880	1,173	1,467	1,760	2,053	2,347	2,640	2,933	3,227	3,520
45	66.0	660	990	1,320	1,650	1,980	2,310	2,640	2,970	3,300	3,630	3,960
50	73.3	733	1,100	1,467	1,833	2,200	2,567	2,933	3,300	3,667	4,033	4,400
55	80.7	807	1,210	1,613	2,017	2,420	2,833	3,227	3,630	4,033	4,437	4,840
60	88.0	880	1,320	1,760	2,200	2,640	3,080	3,520	3,960	4,400	4,840	5,280
65	95.3	953	1,430	1,907	2,383	2,860	3,337	3,813	4,290	4,767	5,243	5,720
70	102.7	1,027	1,540	2,053	2,567	3,080	3,593	4,107	4,620	5,133	5,647	6,160
75	110.0	1,100	1,650	2,200	2,750	3,300	3,850	4,400	4,950	5,500	6,050	6,600
80	117.3	1,173	1,760	2,347	2,933	3,520	4,107	4,693	5,280	5,867	6,453	7,040
85	124.7	1,247	1,870	2,493	3,117	3,740	4,363	4,987	5,610	6,233	6,875	7,480
90	132.0	1,320	1,980	2,640	3,300	3,960	4,620	5,280	5,940	6,600	7,260	7,920
95	139.3	1,393	2,090	2,787	3,483	4,180	4,877	5,573	6,270	6,967	7,663	8,360
100	146.7	1,467	2,200	2,933	3,667	4,400	5,133	5,867	6,600	7,333	8,067	8,800
105	154.0	1,540	2,310	3,080	3,850	4,620	5,390	6,160	6,930	7,700	8,470	9,240
110	161.3	1,613	2,420	3,227	4,033	4,840	5,647	6,453	7,260	8,067	8,873	9,680
115	168.6	1,686	2,530	3,373	4,217	5,060	5,903	6,747	7,590	8,434	9,277	10,120
120	176.0	1,760	2,640	3,520	4,400	5,280	6,160	7,040	7,920	8,800	9,680	10,560
125	183.3	1,833	2,750	3,667	4,583	5,500	6,417	7,334	8,250	9,167	10,084	11,000
130	190.7	1,907	2,860	3,813	4,767	5,720	6,673	7,627	8,580	9,534	10,487	11,440

NOTE: Where length of track circuit is known time in seconds can be determined by dividing its length in feet by "Feet Per Second" at train speed selected.

* Does not allow for drop-away time of relays.

WESTERN RAILROAD SUPPLY COMPANY

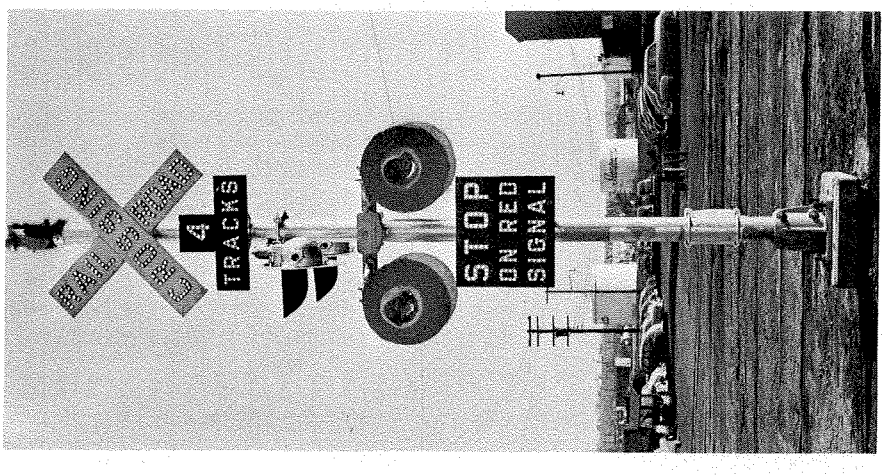

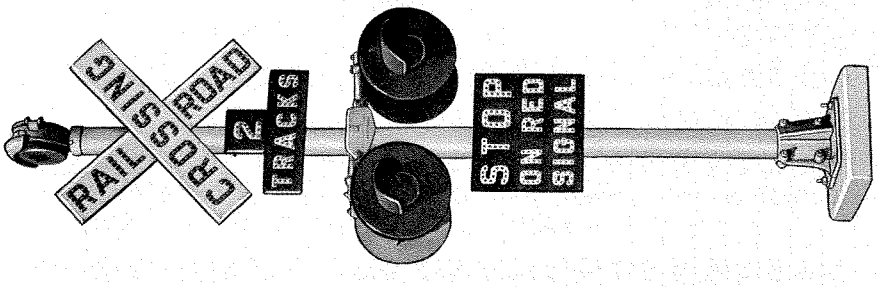

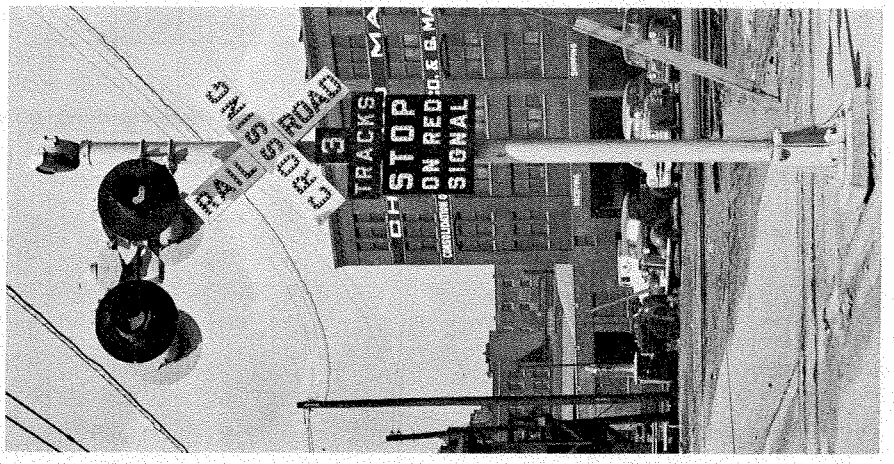

RAIL ROAD
CROSSING
8
TRACKS
STOP
ON RED
SIGNAL

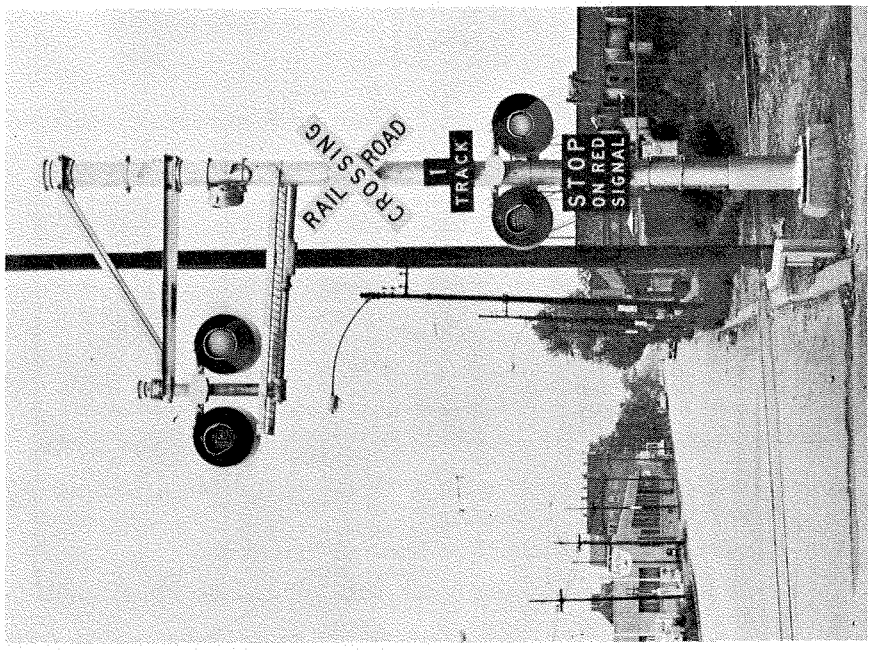
RAIL ROAD
CROSSING
1
TRACK
STOP
ON RED
SIGNAL

Flashing Light Highway Crossing Signals with Type 818-103 Light Units

(Medium Screw Base Receptacle)

ONE-WAY OR TWO-WAY INDICATIONS

Signal A-471

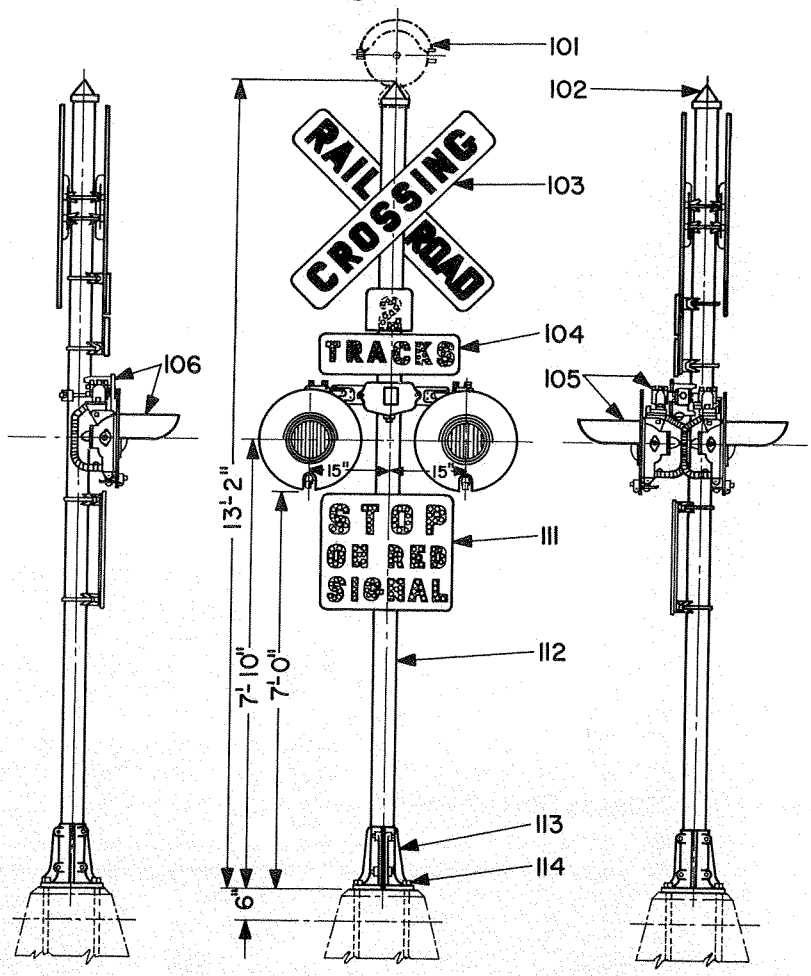

ONE WAY INDICATION

TWO WAY INDICATION

Signals will be furnished with 4" I. D. Pipe Mast unless 5" I. D. Pipe is specified on order.

NOTE:

1 - For ordering references for this signal complete see following page.
2 - For ordering references for Type 818-103 Crossing Signal Light Unit see Plate D170A.
3 - For ordering references for detail parts of this assembly see Plate D420A.
4 - Dimensions shown can be varied to meet particular requirements.

1960

WESTERN RAILROAD SUPPLY COMPANY

Flashing Light Highway Crossing Signals with Type 818-103 Light Units

(Medium Screw Base Receptacle)

ONE-WAY OR TWO-WAY INDICATIONS

Signal A-471

THE FOLLOWING INFORMATION MUST BE SPECIFIED:

1 - The Numeral required on Number of Tracks Sign.

2 - Voltage and wattage of Electric Lamps, if required.

3 - Type of Bell, if required.

NOTE:

No. 5323 Red Roundel will be furnished unless other roundel is specified. (See listing below).

Signals will be furnished with 4" I. D. Pipe Mast unless 5" I. D. Pipe is specified on order.

ORDERING REFERENCE

Specify Plate Number D100, Reference Number and Description

Description: Type No. A-471 Flashing Light Highway Crossing Signal

Ref. No.	Indication	Type of Crossing Sign	Type of Track Sign	With or Without Bell
1	Two Way	Cast Iron	Cast Iron	With
3	Two Way	Cast Iron	Cast Iron	Without
5	Two Way	Cast Iron	Reflector	With
7	Two Way	Cast Iron	Reflector	Without
9	Two Way	Reflector	Reflector	With
11	Two Way	Reflector	Reflector	Without
13	One Way	Cast Iron	Cast Iron	With
15	One Way	Cast Iron	Cast Iron	Without
17	One Way	Cast Iron	Reflector	With
19	One Way	Cast Iron	Reflector	Without
21	One Way	Reflector	Reflector	With
23	One Way	Reflector	Reflector	Without
25	Two Way	Reflex-Reflective	Reflex-Reflective	With
27	Two Way	Reflex-Reflective	Reflex-Reflective	Without
29	One Way	Reflex-Reflective	Reflex-Reflective	With
31	One Way	Reflex-Reflective	Reflex-Reflective	Without

Note: Roundels Available for Flashing Lights Units are:
CL-17, 30° Horizontal Spread.
5319, 160° Horizontal Spread, 12° Down Deflection.
5321, 20° Deflecting.
5323, 30° Horizontal Spread, 15° Down Deflection.
5327, 20° Horizontal Spread, 32° Down Deflection.
5332, 70° Horizontal Spread.
5333, Diffusion-deflection Type, With Horizontal and Downward Spread.

1960

WESTERN RAILROAD SUPPLY COMPANY

Flashing Light Highway Crossing Signals with Type 818-103 Light Units

(Medium Screw Base Receptacle)

ONE-WAY OR TWO-WAY INDICATIONS

Signal A-472

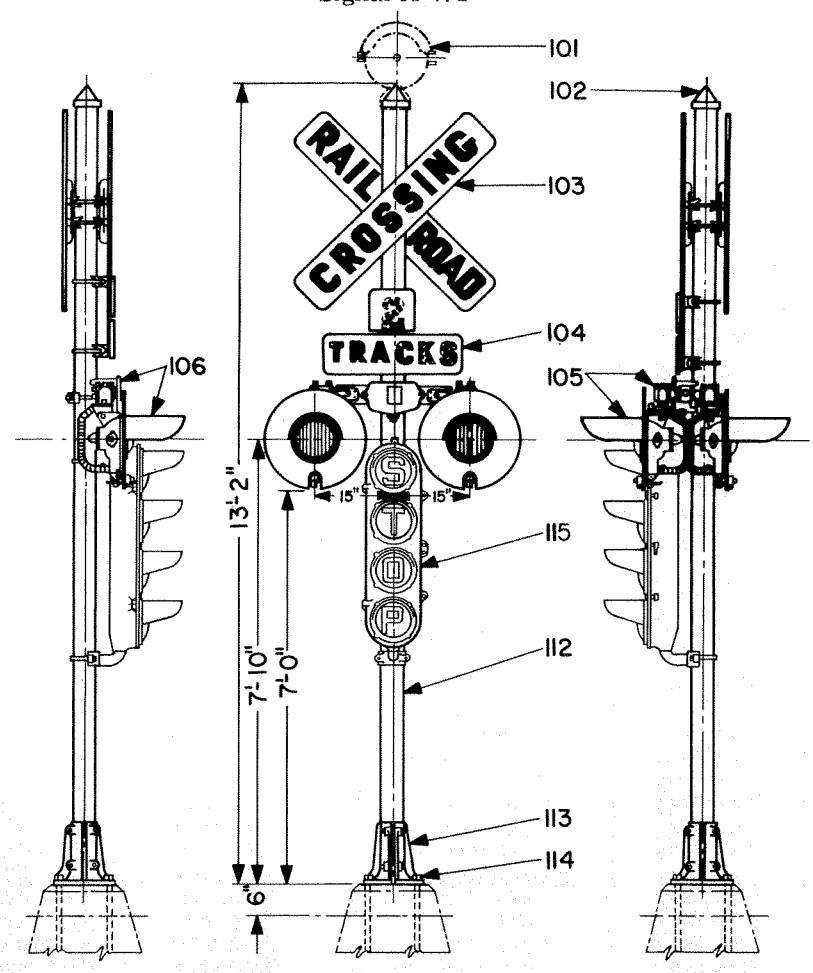

ONE WAY INDICATION

TWO WAY INDICATION

Signals will be furnished with 4" I. D. Pipe Mast unless 5" I. D. Pipe is specified on order.

NOTE:

1 - For ordering references for this signal complete see following page.
2 - For ordering references for Type 818-103 Crossing Signal Light Unit see Plate D170A.
3 - For ordering references for detail parts of this assembly see Plate D420A.
4 - Dimensions shown can be varied to meet particular requirements.

1960

WESTERN RAILROAD SUPPLY COMPANY

Flashing Light Highway Crossing Signals with Type 818-103 Light Units

(Medium Screw Base Receptacle)

ONE-WAY OR TWO-WAY INDICATIONS

Signal A-472

THE FOLLOWING INFORMATION MUST BE SPECIFIED:

1 - The Numeral required on Number of Tracks Sign.

2 - Voltage and wattage of Electric Lamps, if required.

3 - Type of Bell, if required.

NOTE:

No. 5323 Red Roundel will be furnished unless other roundel is specified. (See listing below).

Signals will be furnished with 4" I. D. Pipe Mast unless 5" I. D. Pipe is specified on order.

ORDERING REFERENCE

Specify Plate Number D120, Reference Number and Description

Description: Type No. A-472 Flashing Light Highway Crossing Signal

Ref. No.	Indication	Type of Crossing Sign	Type of Track Sign	With or Without Bell
1	Two Way	Cast Iron	Cast Iron	With
3	Two Way	Cast Iron	Cast Iron	Without
5	Two Way	Cast Iron	Reflector	With
7	Two Way	Cast Iron	Reflector	Without
9	Two Way	Reflector	Reflector	With
11	Two Way	Reflector	Reflector	Without
13	One Way	Cast Iron	Cast Iron	With
15	One Way	Cast Iron	Cast Iron	Without
17	One Way	Cast Iron	Reflector	With
19	One Way	Cast Iron	Reflector	Without
21	One Way	Reflector	Reflector	With
23	One Way	Reflector	Reflector	Without
25	Two Way	Reflex-Reflective	Reflex-Reflective	With
27	Two Way	Reflex-Reflective	Reflex-Reflective	Without
29	One Way	Reflex-Reflective	Reflex-Reflective	With
31	One Way	Reflex-Reflective	Reflex-Reflective	Without

Note: Roundels Available for Flashing Lights Units are:
CL-17, 30° Horizontal Spread.
5319, 160° Horizontal Spread, 12° Down Deflection.
5321, 20° Deflecting.
5323, 30° Horizontal Spread, 15° Down Deflection.
5327, 20° Horizontal Spread, 32° Down Deflection.
5332, 70° Horizontal Spread.
5333, Diffusion-deflection Type, With Horizontal and Downward Spread.

Type 818-103 Flashing Light Unit Assembly for both One-Way and Two-Way Indications

(Medium Screw Base Receptacle)

Type No. 818-103 Light Units are equipped with parabolic glass reflectors, 8-3/8" diameter Roundels and Medium Screw Base Receptacles to accomodate A-19 bulb lamps.

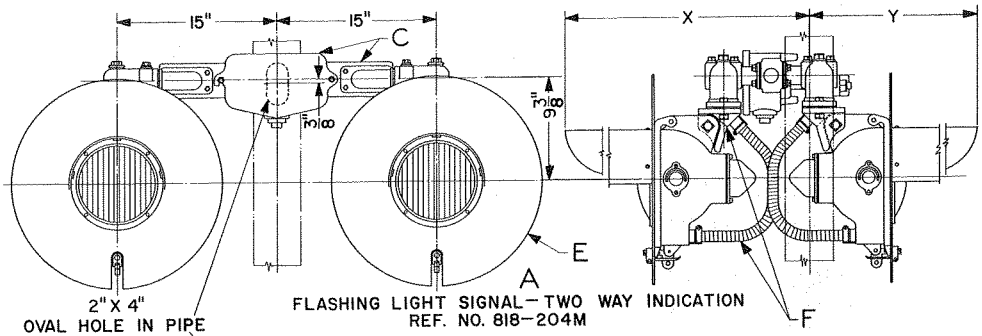

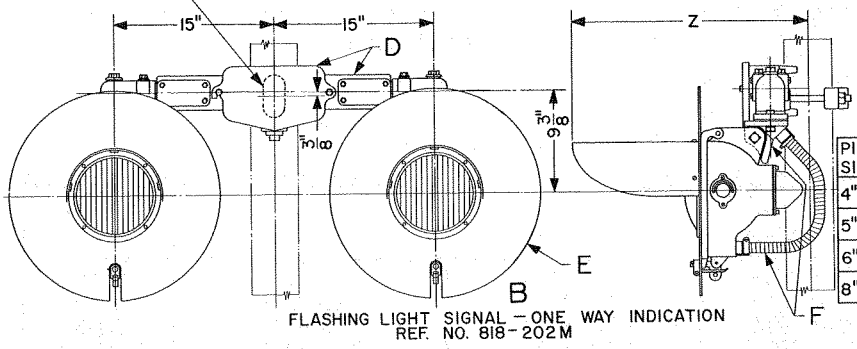

PIPE SIZE	DIM. X	DIM. Y	DIM. Z
4" I.D.	26 3/4"	19 3/4"	22 1/2"
5" I.D.	27 7/16"	19 1/16"	23 3/16"
6" I.D.	28 1/16"	18 7/16"	22 13/16"
8" I.D.	29 1/4"	17 1/4"	25"

For mounting on 3 1/2", 4", 5", 6", or 8" I.D. Pipe Mast, as specified.

NOTE:

1 - For ordering references for these assemblies see following page.

2 - For ordering references for replacement parts for the Light Units see Plate D180A.

3 - For ordering references for replacement parts for the Junctionbox Crossarm see Plate D390A.

4 - For ordering references for replacement parts for the Type 818 Light Unit, with Single Contact, Bayonet Base, Lamp Receptacle see Plate D180 in Catalog Section D, Part No. 2.

1960

WESTERN RAILROAD SUPPLY COMPANY

Type 818-103 Flashing Light Unit Assembly for both One-Way and Two-Way Indications

(Medium Screw Base Receptacle)

THE FOLLOWING INFORMATION MUST BE SPECIFIED:

1 - Voltage and wattage of Electric Lamps, if required.

2 - Inside Diameter of Pipe Mast on which Assembly is to be mounted.

NOTE:
No. 5323 Red Roundels will be furnished unless other roundel is specified. (See listing below).
For Replacement Parts see Plate D180A.

ORDERING REFERENCE
Specify Plate Number D170, Reference Number and Description

Ref. No.	Description	Piece No.
A	Type 818 Flashing Light Unit Assembly, two-way indication, 4 light units with No. 5323 Red Roundels and Lamp Arm with bolts for 4" I. D. Pipe Mast, unless otherwise specified	818-204M
B	Type 818 Flashing Light Unit Assembly, one-way indication, 2 light units with No. 5323 Red Roundels and Lamp arm with bolts for 4" I. D. Pipe Mast, unless otherwise specified	818-202M
C	Junctionbox Lamp Arm, for two-way indication, with bolts for 4" I. D. Pipe Mast, unless otherwise specified	950-818-4
D	Junctionbox Lamp Arm, for one-way indication, with bolts for 4" I. D. Pipe Mast, unless otherwise specified	950-818-2
E	Type 818-103 Flashing Light Unit only (Specify voltage and wattage of electric lamp and roundel desired if other than No. 5323) ...	818-103
F	Adaptor and Flexible Metalic Conduit, for mounting Type 818-103 Light Units on Type 950-3 and 950-5 Junctionbox Crossarm	818-51

Note: Roundels Available for Flashing Light Units are:
CL-17, 30° Horizontal Spread.
5319, 160° Horizontal Spread, 12° Down Deflection.
5321, 20° Deflecting.
5323, 30° Horizontal Spread, 15° Down Deflection.
5327, 20° Horizontal Spread, 32° Down Deflection.
5332, 70° Horizontal Spread.
5333, Diffusion-deflection Type, With Horizontal and Downward Spread.

1960

WESTERN RAILROAD SUPPLY COMPANY

Type 818-103 Crossing Signal Light Unit

(Medium Screw Base Receptacle)

Replacement Parts

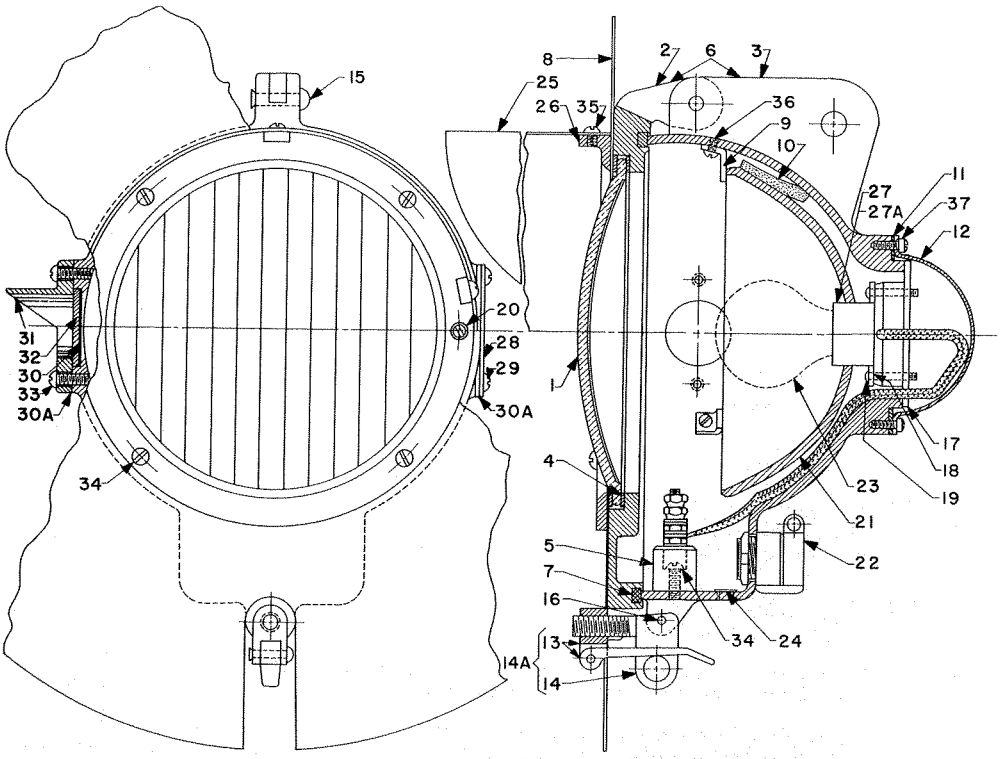

NOTE:

1 - For ordering references for replacement parts for this Light Unit see following page.

2 - For ordering references for replacement parts for the Type 818 Light Units with Single Contact, Bayonet Base, Receptacle, see Plate D180 in Catalog Section D, Part No. 2.

1960

WESTERN RAILROAD SUPPLY COMPANY

Type 818-103 Crossing Signal Light Unit

(Medium Screw Base Receptacle)

Replacement Parts

ORDERING REFERENCE

Specify Plate Number D180 A , Reference Number and Description

Ref. No.	Description	Piece No.
A	Type 818-103 Crossing Signal Light Unit, complete, Specify Roundel desired, See listing Plate D170A	818-103
1	Roundel, as specified, See Listing Plate D170A	
2	Cover	802
3	Case	801
4	Roundel Gasket	825
5	Terminal Block Complete	1056-9
6	Case and Cover, sub-assembly, includes references 2, 3, 7, 13, 14, 15 and 16	818-12
7	Packing, for cover	880-18
8	Background	950-13C
9	Mirror Retaining Cleat	880-14
10	Reflector Pad	880-15
11	Cap Gasket	803-7
12	Spun Aluminum Cap	803-8
13	Hasp Eye Bolt	1410-11
14	Locking Hasp	1410-31
14 a	Locking Hasp and Bolt, complete	1410-30
15	Rivet, 5/16" x 1 1/4" long, Round Head, Brass	
16	Rivet, 1/4" x 1 1/4" long, Round Head, Brass	
17	Retaining Strip	842-1
18	Clamping Strip	842-2
19	Machine Screw, #8-32 x 1" long, Round Head, Brass	
20	Machine Screw, #10-32 x 3/8" long, Round Head, Brass	
21	Parabolic Glass Reflector	819
22	Squeeze Connector, 3/4", straight	
23	Medium Screw Base Lamp.. (Specify Voltage and Wattage)	
24	Ventilator	818-49
25	Hood	823-1
26	Roundel Retaining Ring	802-1
27	Lamp Receptacle, Medium Screw Base	842
27a	Lamp Receptacle, sub-assembly, includes references 17, 18 19 and 27	842-10
28	Side Light Blank Cover	801-3
29	Machine Screw, 1/4"-20 x 1/2" long, Round Head, Brass	
30	Side Light Gasket	818-48
30a	Side Light Hood Gasket	801-2
31	Side Light Hood	880-23
32	Side Light Glass Disc	811
33	Machine Screw, 1/4"-20 x 3/4" long, Round Head, Brass	
34	Machine Screw, #10-32 x 5/8" long, Round Head, Brass	
35	Machine Screw, 1/4"-20 x 3/8" long, Round Head, Brass	
36	Machine Screw, #8-32 x 5/16" long, Round Head, Brass	
37	Machine Screw, #10-32 x 1/2" long, Fillister Head, Brass	
38	Flexible Conduit, 3/4" x 16" long	818-51

1960

WESTERN RAILROAD SUPPLY COMPANY

Type 855-20 Lamp Arm

FOR MOUNTING LIGHTS ON SAME SIDE OF POLE

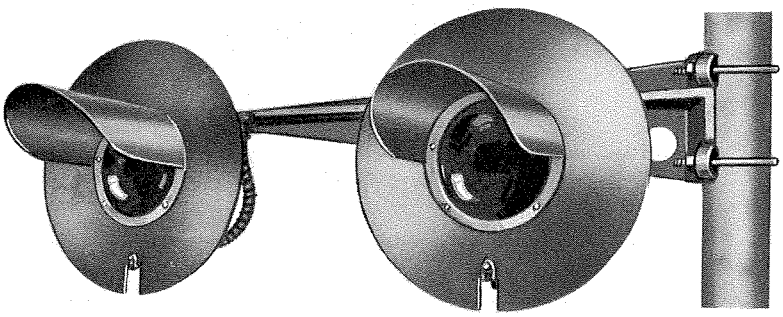

Type 855-20 Brackets permit A.A.R. Flashing Light Units to be located in the proper position when obstructions, such as catch basin tops, prevent the conventional installation or utility poles, etc., obstruct the view of the lights of standard signal assemblies.

Type 818-103 Light Units are designed for use of Medium Screw Base electric lamps. (See Plate D180A)

Type 950A-201 Light Units are designed for use of Single Contact, Bayonet Base, electric lamps. (See Plate D380A)

NOTE:

1 - Specify Inside Diameter of pipe on which Arm is to be mounted.

2 - Specify Voltage and Wattage of electric lamps, if required.

3 - Specify type of roundel required (See listing, Plate D170A).

ORDERING REFERENCE
Specify Plate Number D295, Reference Number and Description

Ref. No.	Description	Piece No.
1	Type 855-20 Lamp Arm, completed with four Type 818-103 Crossing Signal Light Units.... (Specify per notes 1 to 3).....	855-34
2	Type 855-20 Lamp Arm, complete with two Type 818-103 Crossing Signal Light Units.... (Specify per notes 1 to 3).....	855-32
3	Type 855-20 Lamp Arm, complete with four Type 950-201 Crossing Signal Light Units.... (Specify per notes 1 to 3).....	855-34X
4	Type 855-20 Lamp Arm, complete with two Type 950-201 Crossing Signal Light Units.... (Specify per notes 1 to 3).....	855-32X
5	Type 855-20 Lamp Arm, for mounting four Type 818-103 Crossing Signal Light Units.... (Specify per note 1).....	855-36
6	Type 855-20 Lamp Arm, for mounting two Type 818-103 Crossing Signal Light Units.... (Specify per note 1).....	855-35
7	Type 855-20 Lamp Arm, for mounting four 950A-201 Crossing Signal Light Units.... (Specify per note 1).....	855-36X
8	Type 855-20 Lamp Arm, for mounting two 950A-201 Crossing Signal Light Units.... (Specify per note 1).....	855-35X

1960

WESTERN RAILROAD SUPPLY COMPANY

Supporting Brackets
Type 3565-267 and Type 3567-367

For mounting Crossing Signal Light Units, with standard Junctionbox Crossarms, at one side of the mast, as necessitated by obstructions to the view, or for mounting extra light units for warnings along side roads, etc.

The Type 3565-367 Supporting Bracket is of cast iron, designed for mounting on 5" mast, and provides a 15" offset of the dowel mast.

The Type 3565-267 Supporting Bracket consists of castings and a length of 4" I. D. pipe, which may be varied in length, to provide an offset of the dowel mast, of 18 1/2, minimum, up to 42", maximum. The inner bracket, with appropriate "U" Bolts, will fit 4", 5", or 6" I. D. pipe.

Either One-way or Two-way Indication Light Assemblies may be mounted on the dowel masts, which can be turned in the socket to any desired angle.

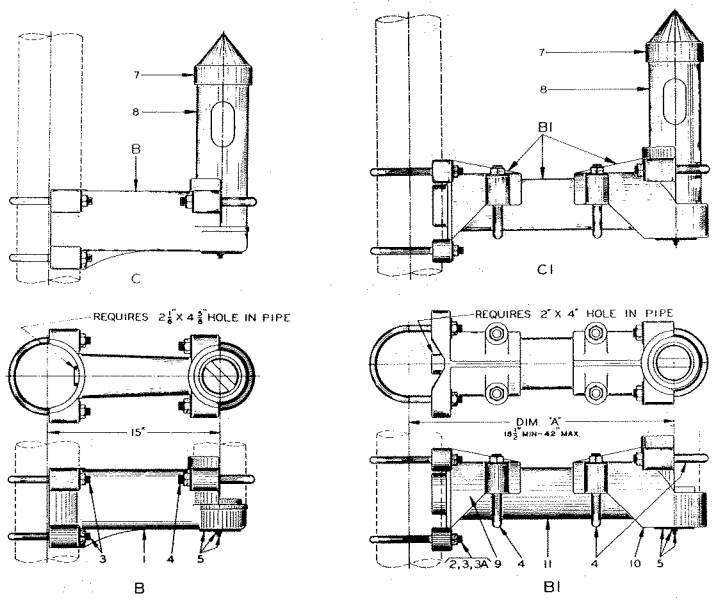

ORDERING REFERENCE

Specify Plate Number D290, Reference Number and Description

Ref. No.	Description	Piece No.
B	Supporting Bracket Assembly, Less Dowel Mast	3565-67
B1	Supporting Bracket Assembly, Less Dowel Mast, Specify Dimension "A" and diameter of signal mast	3565-167
C	Supporting Bracket and Dowel Mast Assembly	3575-367
C1	Supporting Bracket and Dowel Mast Assembly, Specify Dimension "A" and diameter of signal mast	3565-267
1	Bracket only	3565-69
2	"U" Bolt, for 4" I. D. Pipe Mast	1264-4
3	"U" Bolt, for 5", I. D. Pipe Mast	1264-5
3a	"U" Bolt, for 6" I. D. Pipe Mast	1264-6
4	"U" Bolt, for 4" I. D. Pipe Extension or Dowel Mast	3565-163
5	Cover and Clamp, for wire opening	3565-162A
7	Pinnacle, for 4" I. D. Pipe	110-6
8	Dowel Mast, 4" I. D. x 14" long, or as specified	714-8
9	Inner Support, Casting only	3565-168
10	Outer Support, Casting only	3565-166
11	Extension Pipe, 4" x length as required	

1960

WESTERN RAILROAD SUPPLY COMPANY

Flashing Light Highway Crossing Signals with Type 950A-201 Light Units

(Single Contact, Bayonet Base, Receptacle)

ONE-WAY OR TWO-WAY INDICATIONS

Signal A-479

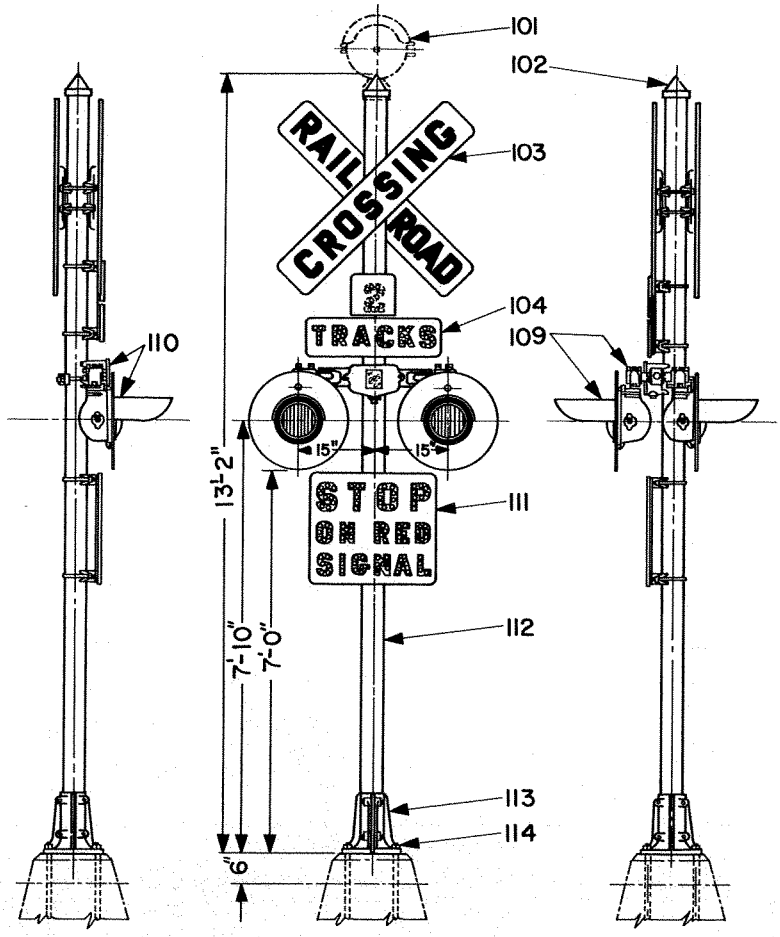

ONE WAY INDICATION

TWO WAY INDICATION

Signals will be furnished with 4" I. D. Pipe Mast unless 5" I. D. Pipe is specified on order.

NOTE:

1 - For ordering references for this signal complete see following page.
2 - For ordering references for Type 950A Crossing Signal Lights see Plate D370A.
3 - For ordering references for detail parts of this assembly see Plate D420A.
4 - Dimensions shown can be varied to meet particular requirements.

1960

WESTERN RAILROAD SUPPLY COMPANY

Flashing Light Highway Crossing Signals with Type 950A-201 Light Units

(Single Contact, Bayonet Base, Receptacle)

ONE-WAY OR TWO-WAY INDICATIONS

Signal A-479

THE FOLLOWING INFORMATION MUST BE SPECIFIED:

1 - The Numeral required on Number of Tracks Sign.

2 - Voltage and wattage of Electric Lamps, if required.

3 - Type of Bell, if required.

NOTE:
No. 5323 Red Roundel will be furnished unless other roundel is specified. (See listing below).

Signals will be furnished with 4" I. D. Pipe Mast unless 5" I. D. Pipe is specified on order.

ORDERING REFERENCE

Specify Plate Number D300, Reference Number and Description

Description: Type No. A-479 Flashing Light Highway Crossing Signal

Ref. No.	Indication	Type of Crossing Sign	Type of Track Sign	With or Without Bell
1	Two Way	Cast Iron	Cast Iron	With
3	Two Way	Cast Iron	Cast Iron	Without
5	Two Way	Cast Iron	Reflector	With
7	Two Way	Cast Iron	Reflector	Without
9	Two Way	Reflector	Reflector	With
11	Two Way	Reflector	Reflector	Without
13	One Way	Cast Iron	Cast Iron	With
15	One Way	Cast Iron	Cast Iron	Without
17	One Way	Cast Iron	Reflector	With
19	One Way	Cast Iron	Reflector	Without
21	One Way	Reflector	Reflector	With
23	One Way	Reflector	Reflector	Without
25	Two Way	Reflex-Reflective	Reflex-Reflective	With
27	Two Way	Reflex-Reflective	Reflex-Reflective	Without
29	One Way	Reflex-Reflective	Reflex-Reflective	With
31	One Way	Reflex-Reflective	Reflex-Reflective	Without

Note: Roundels Available for Flashing Light Units are:
CL-17, 30° Horizontal Spread.
5319, 160° Horizontal Spread, 12° Down Deflection.
5321, 20° Deflecting.
5323, 30° Horizontal Spread, 15° Down Deflection.
5327, 20° Horizontal Spread, 32° Down Deflection.
5332, 70° Horizontal Spread.
5333, Diffusion-deflection Type, With Horizontal and Downward Spread.

1960

WESTERN RAILROAD SUPPLY COMPANY

Flashing Light Highway Crossing Signals with Type 950A-201 Light Units

(Single Contact, Bayonet Base, Receptacle)

ONE-WAY OR TWO-WAY INDICATIONS

Signal A-480

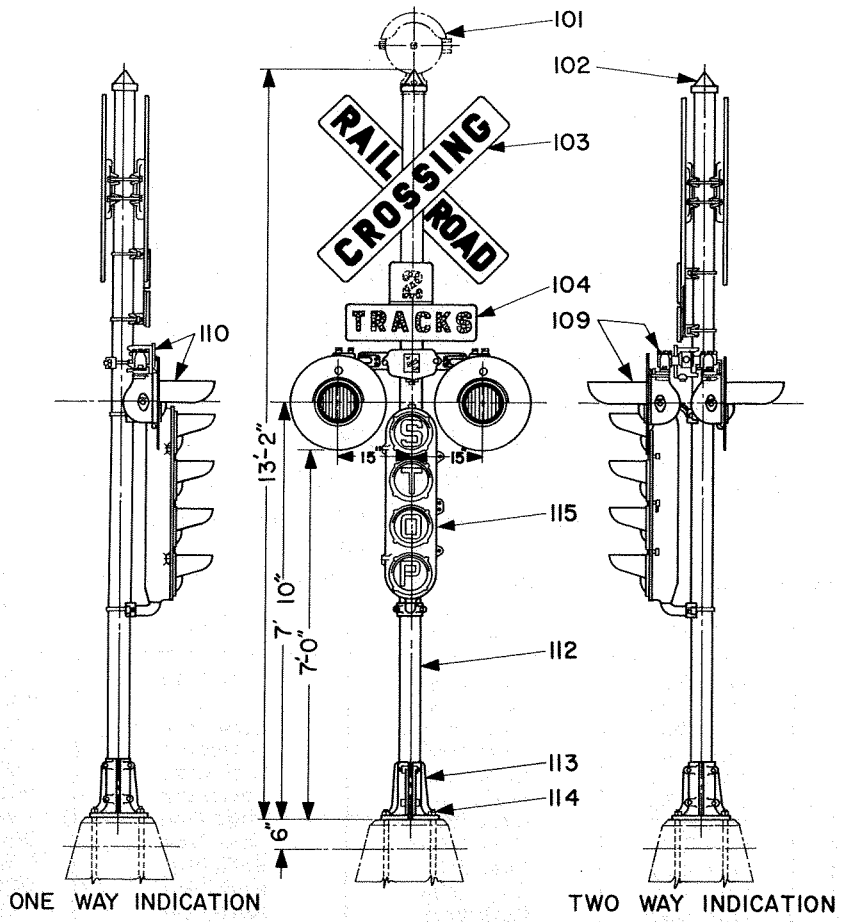

Signals will be furnished with 4" I. D. Pipe Mast unless 5" I. D. Pipe is specified on order.

NOTE:

1 - For ordering references for this signal complete see following page.
2 - For ordering references for Type 950A Flashing Light Signal Units see Plate D370A.
3 - For ordering references for detail parts of this assembly see Plate D420A.
4 - Dimensions shown can be varied to meet particular requirements.

1960

WESTERN RAILROAD SUPPLY COMPANY

Flashing Light Highway Crossing Signals with Type 950A-201 Light Units

(Single Contact, Bayonet Base, Receptacle)

ONE-WAY OR TWO-WAY INDICATIONS

Signal A-480

THE FOLLOWING INFORMATION MUST BE SPECIFIED:

1 - The Numeral required on Number of Tracks Sign.

2 - Voltage and wattage of Electric Lamps, if required.

3 - Type of Bell, if required.

NOTE:

No. 5323 Red Roundel will be furnished in Flashing Light units unless other roundel is specified (See listing on Plate D300).

Verticle Illuminated STOP Sign will be furnished with sand-blasted glass letters and convex roundels unless metal cut-out letters and diffusing roundels are specified. Signals will be furnished with 4" I. D. Pipe Mast unless 5" Pipe is specified on order.

ORDERING REFERENCE

Specify Plate Number D320, Reference Number and Description

Description: Type No. A-480 Flashing Light Highway Crossing Signal

Ref. No.	Indication	Type of Crossing Sign	Type of Track Sign	With or Without Bell
1	Two Way	Cast Iron	Cast Iron	With
3	Two Way	Cast Iron	Cast Iron	Without
5	Two Way	Cast Iron	Reflector	With
7	Two Way	Cast Iron	Reflector	Without
9	Two Way	Reflector	Reflector	With
11	Two Way	Reflector	Reflector	Without
13	One Way	Cast Iron	Cast Iron	With
15	One Way	Cast Iron	Cast Iron	Without
17	One Way	Cast Iron	Reflector	With
19	One Way	Cast Iron	Reflector	Without
21	One Way	Reflector	Reflector	With
23	One Way	Reflector	Reflector	Without
25	Two Way	Reflex-Reflective	Reflex-Reflective	With
27	Two Way	Reflex-Reflective	Reflex-Reflective	Without
29	One Way	Reflex-Reflective	Reflex-Reflective	With
31	One Way	Reflex-Reflective	Reflex-Reflective	Without

Type 950A-201 Flashing Light Unit Assembly for both One-Way and Two-Way Indications

(Single Contact, Bayonet Base, Receptacle)

Type 950A-201 Light Units are equipped with Mangin mirror type glass reflectors, 8-3/8" diameter Roundels and Single Contact, Bayonet Base, Receptacles positioned to accomodate S-8 or S-11 bulb electric lamps, having 2 1/4" light center length.

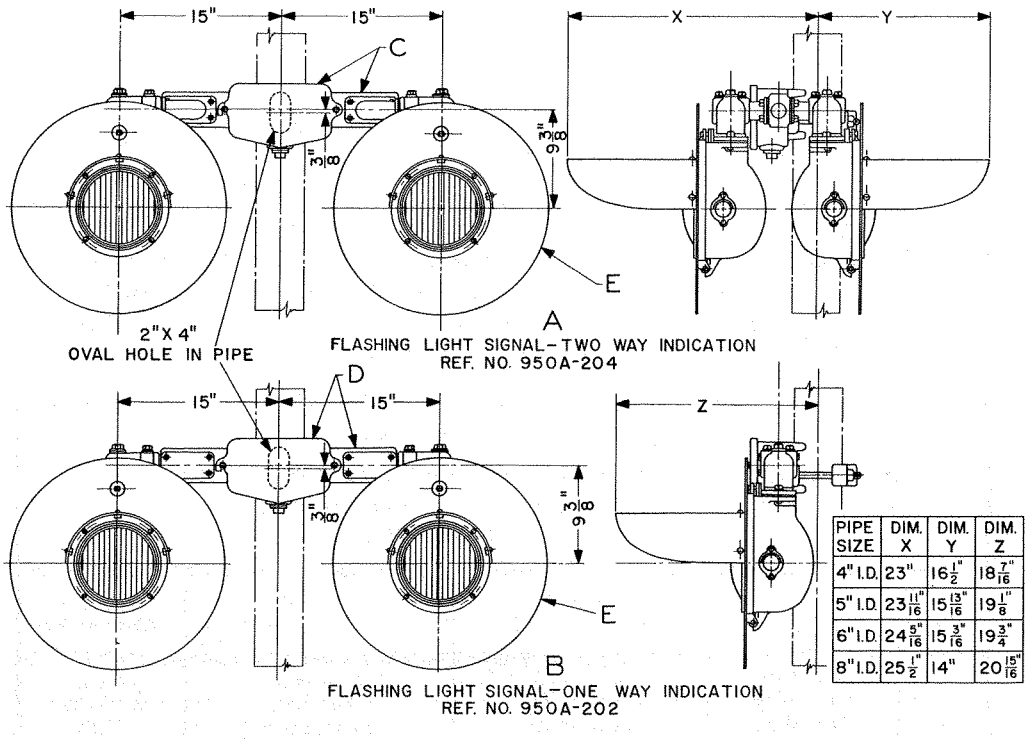

PIPE SIZE	DIM. X	DIM. Y	DIM. Z
4" I.D.	23"	16 1/2"	18 7/16"
5" I.D.	23 11/16"	15 13/16"	19 1/8"
6" I.D.	24 5/16"	15 3/16"	19 3/4"
8" I.D.	25 1/2"	14"	20 15/16"

For mounting on 3 1/2", 4", 5", 6", or 8" I. D. Pipe Mast, as specified

NOTE:

1 - For ordering references for these assemblies see following page.
2 - For replacement parts for the Light Unit see Plate D380A.
3 - For replacement parts for Juntionbox Crossarm see Plate D390A.
4 - For replacement parts for Older Style Type 950-1 Light Unit,see Plate D370 in Catalog Section D, Part No. 2.

1960

WESTERN RAILROAD SUPPLY COMPANY

Type 950A-201 Flashing Light Unit Assembly for both One-Way and Two-Way Indications

(Single Contact, Bayonet Base, Receptacle)

THE FOLLOWING INFORMATION MUST BE SPECIFIED:

1 - Voltage and wattage of electric lamps, if required.

2 - Inside Diameter of Pipe Mast on which Assembly is to be mounted.

NOTE:
No. 5323 Red Roundels will be furnished unless other roundel is specified. (See listing below)

ORDERING REFERENCE
Specify Plate Number D370A, Reference Number and Description

Ref. No.	Description	Piece No.
A	Type 950 Flashing Light Unit Assembly, two-way indication, 4 light units, with 5323 Red Roundels and bolts for 4" I. D. Pipe Mast, unless otherwise specified	950A-204
B	Type 950 Flashing Light Unit Assembly, one-way indication, 2 light units, with 5323 Red Roundels and bolts for 4" I. D. Pipe Mast, unless otherwise specified	950A-202
C	Junctionbox Crossarm, for two-way indication with bolts for 4" I. D. Pipe Mast, unless otherwise specified	950A-5
D	Junctionbox Crossarm, for one-way indication, with bolts for 4" I. D. Pipe Mast, unless otherwise specified	950A-3
E	Type 950A-201 Flashing Light Unit only (Specify voltage and wattage of electric lamp and roundel desired. (See listing below)	950A-201

Note: Roundels Available for Flashing Lights Units are:
CL-17, 30° Horizontal Spread.
5319, 160° Horizontal Spread, 12° Down Deflection.
5321, 20° Deflecting.
5323, 30° Horizontal Spread, 15° Down Deflection.
5327, 20° Horizontal Spread, 32° Down Deflection.
5332, 70° Horizontal Spread.
5333, Diffusion-deflection Type, With Horizontal and Downward Spread.

Type 950A-201 Crossing Signal Light Unit

(Single Contact, Bayonet Base, Receptacle)

Replacement Parts

All Castings in the Type 950A-201 Light Unit are Aluminum. Replacement parts of cast aluminum will be furnished unless cast iron is specified. Aluminum and cast iron parts are physically interchangeable.

Sheet Aluminum Hoods and Backgrounds will be furnished on all orders.

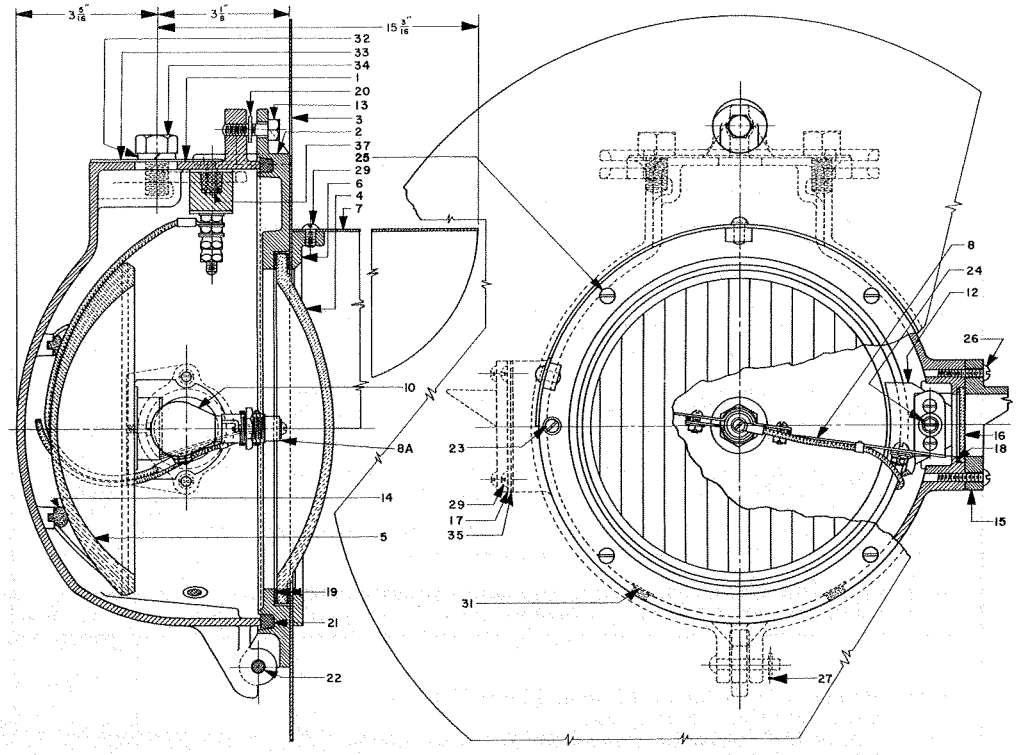

NOTE:

1 - For ordering references for replacement parts for this Light Unit see following page.

2 - For ordering references for replacement parts for the Older Style, Type 950-1, Light Unit see Plate D370 in Catalog Section D, Part No. 2.

1960

WESTERN RAILROAD SUPPLY COMPANY

Type 950A-201 Crossing Signal Light Unit

(Single Contact, Bayonet Base, Receptacle)

Replacement Parts

ORDERING REFERENCE

Specify Plate Number D380A , Reference Number and Description

Ref. No.	Description	Piece No.
A	Type 950A-201 Crossing Signal Light Unit, complete, specify roundel desired, See listing Plate D370A	950A-201
1	Case	950A-11
2	Cover	950A-12
3	Background	950-13A
4	Roundel, (See listing Plate D370A)	
5	Mangin Mirror Reflector	822
6	Roundel Retaining Ring	802-1
7	Hood	823-1A
8	Lamp Bracket and Receptacle, sub-assembly	950-250A
8a	Lamp Receptacle and Adjusting Nut, only	950-255
10	Single Contact, Bayonet Base Lamp, (Specify Voltage and Wattage	
12	Reflector Retaining Plate	880-211
13	Cap Screw, 5/16" x 7/8" long, Hexagon Head, Steel	
13a	Cap Screw and Retaining Washer Assembly	950-270R
14	Reflector Pad	880-15
15	Side Light Hood	880A-23
16	Side Light Glass Disc	811
17	Side Light Blank Cover	801-3
18	Side Light Gasket	818-48
19	Roundel Gasket	825
20	Retaining Washer	950-270
21	Packing, for cover	880-18
22	Hinge Pin and Cotter	950-259A
23	Machine Screw, #10-32 x 1/2" long, Fillister Head, Brass	
24	Machine Screw, #10-32 x 3/8" long, Fillister Head, Brass	
25	Machine Screw, #10-32 x 5/8" long, Round Head, Brass	
26	Machine Screw, 1/4"-20 x 3/4" long, Round Head, Brass	
27	Cotter Pin, 3/32" x 5/8" long, steel	
29	Machine Screw, 1/4"-20 x 3/8" long, Round Head, Brass	
31	Ventilator	818-49
32	Lock Washer, 1/2", steel	
33	Gasket	950-17
34	Cap Screw, 1/2"-13 x 1 1/4", Hexagon Head, Steel	
35	Gasket	801-2
37	Cover sub-assembly, includes references 2, 13, 20 and 21	950A-231

NOTE:

For replacement parts for Older Style, Type 950-1, Light Unit see Plate D370 in Catalog Section D, Part No. 2.

1960

WESTERN RAILROAD SUPPLY COMPANY

Junction Cross Arm for Mounting Type 950A-201 Crossing Signal Light Units Replacement Parts

All castings in the Type 950A Junctionbox Crossarms are Aluminum. Replacement parts of cast aluminum will be furnished unless cast iron is specified. Aluminum and cast iron parts are physically interchangeable.

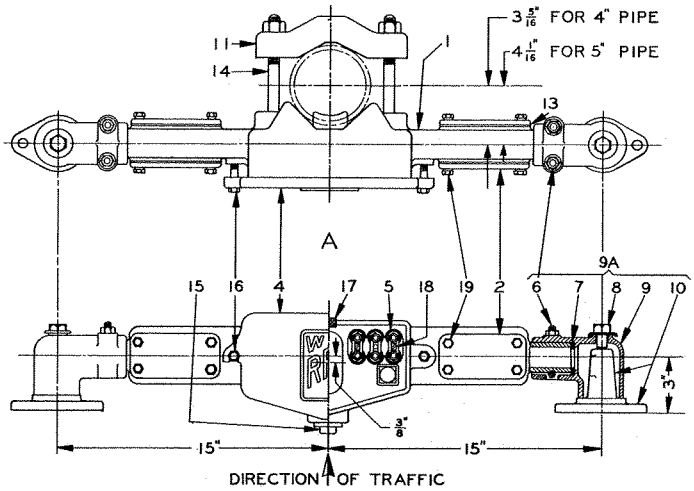

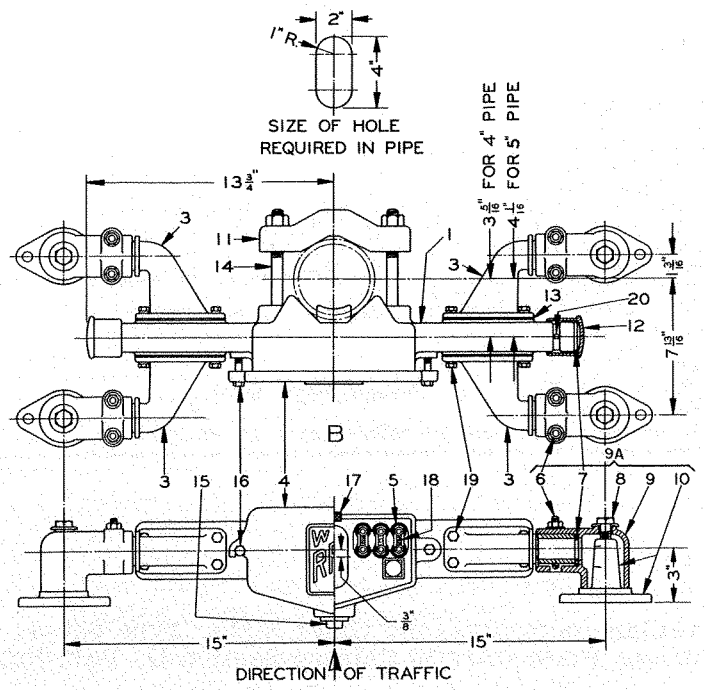

NOTE:

1 - For ordering references for replacement parts for these Junctionbox Crossarms see following page.

1960

WESTERN RAILROAD SUPPLY COMPANY

Junction Cross Arm for Mounting Type 950A-201 Crossing Signal Light Units

Replacement Parts

ORDERING REFERENCE
Specify Plate Number D390A, Reference Number and Description

Ref. No.	Description	Piece No.
A	Junctionbox Crossarm Assembly complete, for one-way indication (Specify I. D. of Pipe Mast)	950A-3
B	Junctionbox Crossarm Assembly complete, for two-way indication (Specify I. D. of Pipe Mast)	950A-5
1	Junctionbox, casting only	950A-22
1a	Junctionbox, sub-assembly of references 1, 4, 5, 15, 16, 17, and 18	950A-62
2	Cover Plate	950A-39
3	Bracket, 3 1/2" extension	950A-57
4	Cover, with packing	950A-21
5	Terminal Block, complete, 6 binding posts	2506-13E
6	"U" Bolt, complete with nuts	950-31
7	Gasket, sponge rubber	950-28
8	Bolt, complete with cupped washer	950-33
9	Supporting Bracket, casting only	950A-30
9a	Supporting Bracket, sub-assembly of references 6 to 10 inc.	950A-63
10	Light Unit Support	950A-32
11	Adaptor Clamp	950A-34
12	End Cap, with set screw and gasket	950A-29A
13	Gasket, cork	950-27
14	Machine Bolt, with hexagon nut, 5/8"-11 x 6" long, for mounting junctionbox crossarm on 4" I. D. Pipe	
14a	Machine Bolt, with hexagon nut, 5/8"-11 x 7 1/2" long, for mounting junctionbox crossarm on 5" I. D. Pipe	
14b	Machine Bolt, with hexagon nut, 5/8"-11, curved, for mounting junctionbox crossarm on 6" I. D. Pipe	3364-37
14c	Machine Bolt, with hexagon nut, 5/8"-11, curved, for mounting junctionbox crossarm on 8" I. D. Pipe	3364-35
15	Pipe Plug, 1 1/4"	
16	Cap Screw, 3/8"-16 x 2" long, Hexagon Head, Steel	
17	Torchwick Packing, 3/8" diameter, 27" long	
18	Machine Screw #10-32 x 5/8" long, Fillister Head, Brass	
19	Cap Screw, 3/8"-16 x 7/8" long, Hexagon Head, steel, with plain washer	
20	Set Screw, 1/4"-20 x 1/2" long, Square Head, Cup Point	

NOTE:
For ordering reference for Adaptor for attaching Type 818-103 Light Unit to these Junctionbox Crossarms, See Plate D170A.

1960

WESTERN RAILROAD SUPPLY COMPANY

Detail Parts for Flashing Light Highway Crossing Signals

Reference Numbers listed below correspond to numbers shown on detail parts on Flashing Light Highway Crossing Signal Assemblies illustrated on the preceding pages of this catalog section.

ORDERING REFERENCE

Specify Plate Number D420 A , Reference Number and Description

Ref. No.	Description	Piece No.
	Bells and Pinnacles	
101	Type 222 D. C. Crossing Bell, 12" Gong, for mounting on 4" I. D. Pipe Mast, (See Pl. B5 for details)	222-CR
101b	Type 222 D. C. Crossing Bell, 12" Gong, for mounting on 5" I. D. Pipe Mast, (See Pl. B5 for details)	222-FR
101c	Pedestrian Type Crossing Bell, 8" Gong, for mounting on 4" I. D. Pipe Mast, (See Pl. B15 for details)	1275-CR
101d	Pedestrian Type Crossing Bell, 8" Gong, for mounting on 5" I. D. Pipe Mast, (See Pl. B15 for details)	1275-FR
101e	Type 1203 A. C. Crossing Bell, 12" Gong, for mounting on 4" I. D. Pipe Mast, (See Pl. B10 for details)	1203-CR
101f	Type 1203 A. C. Crossing Bell, 12" Gong, for mounting on 5" I. D. Pipe Mast, (See Pl. B10 for details)	1203-FR
102	Pinnacle, for 4" I. D. Pipe Mast	110-6
102a	Pinnacle, for 5" I. D. Pipe Mast	110-8
	Railroad Crossing Signs (See Catalog Section H for Details)	
103	Railroad Crossing Sign, Cast Iron, for mounting on 4" I. D. Pipe Mast	3320-14
103a	Railroad Crossing Sign, Cast Iron, for mounting on 5" I. D. Pipe Mast	3320-15
103b	Railroad Crossing Sign, Reflector Unit Type, Vitreous Enamel Finish, for mounting on 4" I. D. Pipe Mast	3380-3
103c	Railroad Crossing Sign, Reflector Unit Type, Vitreous Enamel Finish, for mounting on 5" I. D. Pipe Mast	3380-3A
103d	Railroad Crossing Sign, Reflector Unit Type, Synthetic Enamel Finish, for mounting on 4" I. D. Pipe Mast	3380-4
103e	Railroad Crossing Sign, Reflector Unit Type, Synthetic Enamel Finish, for mounting on 5" I. D. Pipe Mast	3380-4A
103f	Railroad Crossing Sign, Reflex-Reflecting Type, sheet steel, for mounting on 4" I. D. Pipe Mast	3380-604
103g	Railroad Crossing Sign, Reflex-Reflecting Type, sheet steel, for mounting on 5" I. D. Pipe Mast	3380-605
103h	Railroad Crossing Sign, Reflex-Reflecting Type, extruded aluminum, for mounting on 4" I. D. Pipe Mast	3380-704
103i	Railroad Crossing Sign, Reflex-Reflecting Type, extruded aluminum, for mounting on 5" I. D. Pipe Mast	3380-705

Continued on next page

1960

WESTERN RAILROAD SUPPLY COMPANY

Detail Parts for Flashing Light Highway Crossing Signals

(Continued)

ORDERING REFERENCE

Specify Plate Number D420 A . Reference Number and Description

Ref. No.	Description	Piece No.
	Number of Tracks Signs (See Catalog Section H for Details) (Specify Numeral required)	
104	Number of Tracks Sign, Cast Iron, for mounting on 4" I. D. Pipe Mast	16444-14
104a	Number of Tracks Sign, Cast Iron, for mounting on 5" I. D. Pipe Post	16444-15
104b	Number of Tracks Sign, Reflector Unit Type, Vitreous Enamel finish, for mounting on 4" I. D. Pipe Mast	3368-3
104c	Number of Tracks Sign, Reflector Unit Type, Vitreous Enamel finish, for mounting on 5" I. D. Pipe Mast	3368-3A
104d	Number of Tracks Sign, Reflector Unit Type, Synthetic Enamel finish, for mounting on 4" I. D. Pipe Mast	3368-4
104e	Number of Tracks Sign, Reflector Unit Type, Synthetic Enamel finish, for mounting on 5" I. D. Pipe Mast	3368-4A
104f	Number of Tracks Sign, Reflex-Reflecting Type, sheet steel, for mounting on 4" I. D. Pipe Mast	3368-604
104g	Number of Tracks Sign, Reflex-Reflecting Type, sheet steel, for mounting on 5" I. D. Pipe Mast	3368-605
104h	Number of Tracks Sign, Reflex-Reflecting Type, extruded aluminum, for mounting on 4" I. D. Pipe Mast	3368-704
104i	Number of Tracks Sign, Reflex-Reflecting Type, extruded aluminum, for mounting on 5" I. D. Pipe Mast	3368-705
	Flashing Light Units (Specify Roundel required)	
105	Flashing Light Unit Assembly, Type 818, two-way indication, for mounting on 4" I. D. Pipe Mast	818-204M
105a	Flashing Light Unit Assembly, Type 818, two-way indication, for mounting on 5" I. D. Pipe Mast	818-204M
106	Flashing Light Unit Assembly, Type 818, one-way indication, for mounting on 4" I. D. Pipe Mast	818-202M
106a	Flashing Light Unit Assembly, Type 818, one-way indication, for mounting on 5" I. D. Pipe Mast	818-202M
109	Flashing Light Unit Assembly, Type 950, two-way indication, for mounting on 4" I. D. Pipe Mast	950A-204
109a	Flashing Light Unit Assembly, Type 950, two-way indication, for mounting on 5" I. D. Pipe Mast	950A-204
110	Flashing Light Unit Assembly, Type 950, one-way indication, for mounting on 4" I. D. Pipe Mast	950A-202
110a	Flashing Light Unit Assembly, Type 950, one-way indication, for mounting on 5" I. D. Pipe Mast	950A-202

Continued on next page

Detail Parts for Flashing Light Highway Crossing Signals

(Continued)

ORDERING REFERENCE

Specify Plate Number D420A, Reference Number and Description

Ref. No.	Description	Piece No.
	"STOP ON RED SIGNAL" Signs	
	(See Catalog Section H for Details)	
111	Stop on Red Signal sign, Reflector Unit Type, Vitreous Enamel finish, for mounting on 4" I. D. Pipe Mast	3366-3
111a	Stop on Red Signal sign, Reflector Unit Type, Vitreous Enamel finish, for mounting on 5" I. D. Pipe Mast	3366-3A
111b	Stop on Red Signal sign, Reflector Unit Type, Synthetic Enamel finish, for mounting on 4' I. D. Pipe Mast	3366-4
111c	Stop on Red Signal sign, Reflector Unit Type, Synthetic Enamel finish, for mounting on 5" I. D. Pipe Mast	3366-4A
111d	Stop on Red Signal sign, Reflex-Reflecting Type, sheet steel, for mounting on 4" I. D. Pipe Mast	3366-604
111e	Stop on Red Signal sign, Reflex-Reflecting Type, sheet steel, for mounting on 5" I. D. Pipe Mast	3366-605
111f	Stop on Red Signal sign, Reflex-Reflecting Type, sheet Aluminum, for mounting on 4" I. D. Pipe Mast	3366-704
111g	Stop on Red Signal sign, Reflex-Reflecting Type, sheet Aluminum, for mounting on 5" I. D. Pipe Mast	3366-705
	Masts and Bases	
112	Pipe Mast, 4" I. D., 12' 10" long, drilled as required	
112a	Pipe Mast, 5" I. D., 12' 10" long, drilled as required	
	(See Catalog Section E for Details of Bases)	
113	Clamp Type Base, 9 1/2" x 9 1/2" anchor bolt spacing, for 4" I. D. Pipe Mast	14492
113a	Clamp Type Base, 11-11/16" x 11-11/16" anchor bolt spacing, for 4" I. D. Pipe Mast	2143
113b	Clamp Type Base, 11-11/16" x 11-11/16" anchor bolt spacing, for 5" I. D. Pipe Mast	2145
113c	Junctionbox Clamp Type Base, 9 1/2" x 9 1/2" anchor bolt spacing, for 4" I. D. Pipe Mast	2146-11
113d	Junctionbox Clamp Type Base, 11-11/16" x 11-11/16" anchor bolt spacing, for 4" I. D. Pipe Mast	2147-11
113e	Junctionbox Clamp Type Base, 11-11/16" x 11-11/16" anchor bolt spacing, for 5" I. D. Pipe Mast	2148-11
114	Anchor Bolt, 1" x 36", with hexagon nut and plain washer	11079

Continued on next page

1960

WESTERN RAILROAD SUPPLY COMPANY

Detail Parts for Flashing Light Highway Crossing Signals

(Continued)

ORDERING REFERENCE

Specify Plate Number D420 A, Reference Number and Description

Ref. No.	Description	Piece No.
	Vertical Illuminated STOP Signs	
	(See Plate D430A for Details)	
115	Type 2800 Vertical Illuminated STOP Sign, with sandblasted glass letters and Single Contact, Bayonet Base, lamp receptacles, for mounting on 4" I. D. Pipe Mast	2800-12
115a	Type 2800 Vertical Illuminated STOP Sign, with sandblasted glass letters and Single Contact, Bayonet Base, lamp receptacles, for mounting on 5" I. D. Pipe Mast	2800-13
115b	Type 2800 Vertical Illuminated STOP Sign, with metal cut-out letters and Single Contact, Bayonet Base, lamp receptacles, for mounting on 4" I. D. Pipe Mast	2800-15
115c	Type 2800 Vertical Illuminated STOP Sign, with metal cut-out letters and Single Contact, Bayonet Base, lamp receptacles, for mounting on 5" I. D. Pipe Mast	2800-16
115d	Type 2801 Vertical Illuminated STOP Sign, with sandblasted glass letters and Medium Screw Base lamp receptacles, for mounting on 4" I. D. Pipe Mast	2801-12
115e	Type 2801 Vertical Illuminated STOP Sign, with sandblasted glass letters and Medium Screw Base Lamp receptacles, for mounting on 5" I. D. Pipe Mast	2801-13
115f	Type 2801 Vertical Illuminated STOP Sign, with metal cut-out letters and Medium Screw Base lamp receptacles, for mounting on 4" I. D. Pipe Mast	2801-15
115g	Type 2801 Vertical Illuminated STOP Sign, with metal cut-out letters and Medium Screw Base lamp receptacles, for mounting on 5" I. D. Pipe Mast	2801-16

1960

WESTERN RAILROAD SUPPLY COMPANY

Illuminated STOP Signs
With Mangin Mirror Reflectors

Type 2800 For Single Contact, Bayonet Base, Lamps.
Type 2801 For Medium Screw Base Lamps.

THE FOLLOWING INFORMATION MUST BE SPECIFIED:

1 - Inside Diameter of Pipe Mast on which Sign is to be mounted.
2 - Voltage and Wattage of electric lamps, if required.

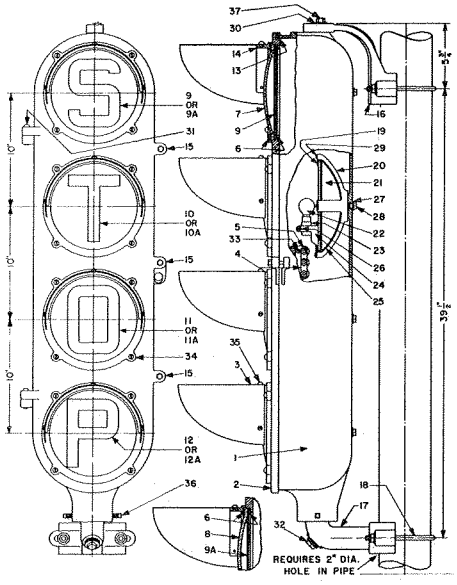

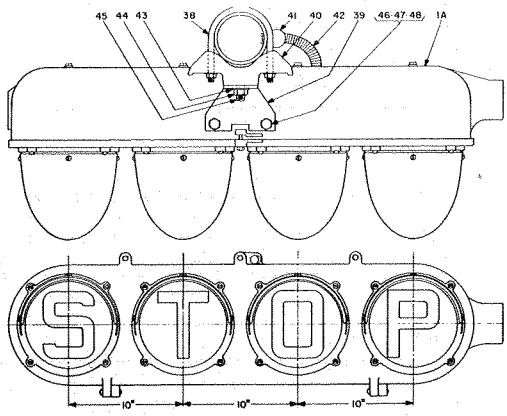

For ordering references for these signs and the most frequently required replacement parts, see following page.

NOTE:

1 - Single Contact, Bayonet Base lamps having 1 1/4" light center length should be used.
2 - Medium Screw Base, Street Railway type, lamps of either 23 watt or 36 watt rating should be used.

1960

WESTERN RAILROAD SUPPLY COMPANY

Illuminated STOP Signs
With Mangin Mirror Reflectors

Type 2800 For Single Contact, Bayonet Base, Lamps.

Type 2801 For Medium Screw Base Lamps.

(Specify Diameter of Pipe Mast on which Sign is to be mounted)

ORDERING REFERENCE

Specify Plate Number D430A, Reference Number and Description

Ref. No.	Description	Piece No.
A	Vertical Illuminated STOP sign, with sandblasted glass letters and Single Contact, Bayonet Base, receptacles	2800-VG
B	Vertical Illuminated STOP sign, with sandblasted glass letters and Medium Screw Base receptacles	2801-VG
C	Vertical Illuminated STOP sign, with metal cut-out letters and Single Contact, Bayonet Base, receptacles	2800-VM
D	Vertical Illuminated STOP sign, with metal cut-out letters and Medium Screw Base receptacles	2801-VM
E	Horizontal Illuminated STOP sign, with sandblasted glass letters and Single Contact, Bayonet Base, receptacles	2800-HG
F	Horizontal Illuminated STOP sign, with sandblasted glass letters and Medium Screw Base receptacles	2801-HG
G	Horizontal Illuminated STOP sign, with metal cut-out letters and Single Contact, Bayonet Base, receptacles	2800-HM
H	Horizontal Illuminated STOP sign, with metal cut-out letters and Medium Screw Base receptacles	2801-HM
7	Red, Convex, Roundel, 8-3/8" diameter, diffusing	5328
8	Red, Convex, Roundel, 8-3/8" diameter, plain	5329
9	Sandblasted Glass Letter "S"	2856
9a	Metal Cut-out Letter "S"	1806-626
10	Sandblasted Glass Letter "T"	2857
10a	Metal Cut-out Letter "T"	1806-627
11	Sandblasted Glass Letter "O"	2858
11a	Metal Cut-out Letter "O"	1806-628
12	Sandblaster Glass Letter "P"	2859
12a	Metal Cut-out Letter "P"	1806-629
21	Mangin mirror reflector	822
22	Lamp, Single Contact, Bayonet Base, Specify voltage and wattage	
22a	Lamp, Medium Screw Base, Street Railway type, specify voltage and, either, 23 watt or 36 watt	

NOTE:

1 - For additional references for replacement parts for these STOP signs, request copy of "Replacement Parts Listing," corresponding to numerals shown in illustrations reproduced on opposite page.

No Turn Signals
Type A457 and Type A534

Signals of this type are often used in conjunction with Flashing Light Signals at locations where the use of additional Lights on the signal mast would not provide suitable added protection. Their use is the safest method of protecting street or highway traffic on roadways running parallel to the railroad without interfering with traffic not crossing the tracks.

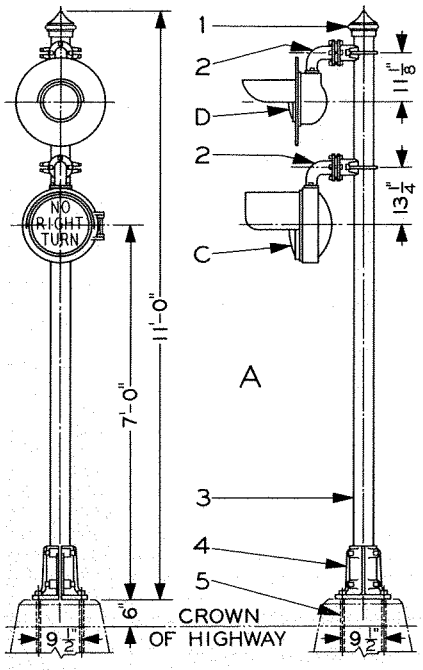

TYPE A457

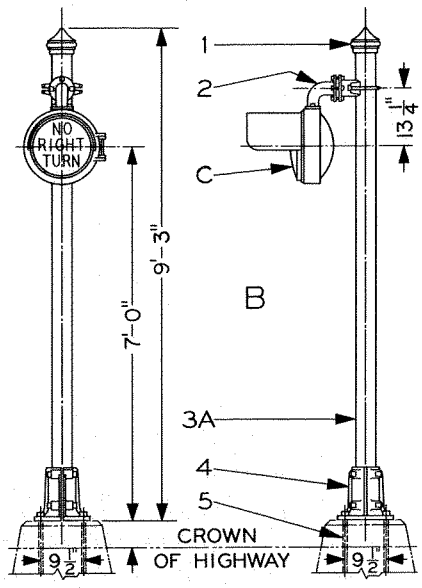

TYPE A534

NOTE:

1 - For ordering references for these signals and components see following page.
2 - For ordering references for replacement parts for Yellow Light Unit see Plate D380A in this Catalog Section.
3 - Replacement Parts List for NO TURN Sign will be furnished on request.
4 - The No Turn Light Unit will be furnished with other legend, as may be required, stenciled on inner glass.

1960

WESTERN RAILROAD SUPPLY COMPANY

No Turn Signals
Type A457 and Type A534

ORDERING REFERENCE

Specify Plate Number D495 A , Reference Number and Description

Ref. No.	Description	Piece No.
A1	"NO LEFT TURN" Signal with Yellow Flashing Light Unit, Pole, Base, Pinnacle and Anchor Bolts	A457L
A2	"NO RIGHT TURN" Signal with Yellow Flashing Light Unit, Pole, Base, Pinnacle and Anchor Bolts	A457R
A3	"NO TURN" Signal with Yellow Flashing Light Unit, Pole, Base, Pinnacle and Anchor Bolts	A457N
B1	"NO LEFT TURN" Sign with Pole, Base, Pinnacle and Anchor Bolts	A534L
B2	"NO RIGHT TURN" Sign with Pole, Base, Pinnacle and Anchor Bolts	A534R
B3	"NO TURN" Sign with Pole, Base, Pinnacle and Anchor Bolts	A534N
C1	"NO LEFT TURN" Sign with Adaptor Bracket and "U" Bolt	939-1L
C2	"NO RIGHT TURN" Sign with Adaptor Bracket and "U" Bolt	939-1R
C3	"NO TURN" Sign with Adaptor Bracket and "U" Bolt	939-1N
C4	"NO LEFT TURN" Sign, only, without Bracket and "U" Bolt	939-1LX
C5	"NO RIGHT TURN" Sign, only, without Bracket and "U" Bolt	939-1RX
C6	"NO TURN" Sign, only, without Bracket and "U" Bolt	939-1NX
D	Yellow Flashing Light Unit, with Adaptor Bracket and "U" Bolt	950A-501
D1	Yellow Flashing Light Unit, only, without Bracket and "U" Bolt	950A-201
1	Pinnacle, for 4" I. D. Pipe Mast	12452
2	Adaptor Bracket with "U" Bolt, nuts and washers	939-51
3	Pipe Mast, 4" I. D. x 10' 8" long, for A457 signal	714-21-3
3a	Pipe Mast, 4" I. D. x 9' 0" long, for A534 Sign	714-20-2
4	Split Base, for 4" I. D. Pipe Mast	14492
5	Anchor Bolt, 1" x 24" long, with Hexagon Nut and Washer	11079-1
6	Transparent Outer Cover, Glass	221718
6a	Transparent Outer Cover, Plastic	221718P

NOTE:

1 - The No Turn Signs will be furnished with Glass Outer cover unless Plastic outer cover is specified.

2 - 10 Volt, 25 Watt, Single Contact, Bayonet Base, Electric Lamps, S-11 Bulb, having light center length of 2 1/4", are recommended for the No Turn Signs, but are not furnished unless specified on order.

3 - No Turn Sign and Yellow Flashing Light Unit mounting Brackets are furnished with "U" Bolts for 4" Pipe Mast, unless otherwise specified.

1960

WESTERN RAILROAD SUPPLY COMPANY

Accessories for Highway Crossing Signals

Type 1553-20
MARKER LIGHT

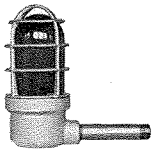

Type 675
MARKER LIGHT

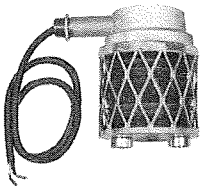

Type 1585-80
MARKER LIGHT

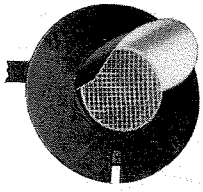

Type 879
ROUNDEL PROTECTOR

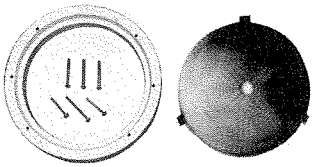

Type 880-311
PHANTOM SUPPRESSOR KIT

The various Marker Lights are intended for use where Crossing Signals are, of necessity, mounted close to the curb-line or on center-of-street islands. Except Type 1585-80, they are supplied with Red or Yellow glassware, as specified.

The Lens Protector prevents Roundel breakage due to stones or other objects, yet does not obstruct the light beam.

The Phantom Suppressor and adaptor can be attached to either the Type 818-103 or the Type 950A-201 Flashing Light Units.

ORDERING REFERENCE

Specify Plate Number D435A, Reference Number and Description

Ref. No.	Description	Piece No.
1	Type 1553 Marker Light, with Single Contact, Bayonet Base, lamp receptacle and 3 1/2" dia., 2 1/4" focus, Red, Lens	1553-20R
1a	Type 1553 Marker Light, with Single Contact, Bayonet Base, lamp receptacle and 3 1/2" dia., 2 1/4" focus, Yellow, Lens	1553-20Y
3	Type 675 Marker Light, with Medium Screw Base lamp receptacle and Red Globe	675-R
3a	Type 675 Marker Light, with Medium Screw Base lamp receptacle and Yellow Globe	675-Y
3b	Red Globe for Type 675 Marker Light	90801-1R
3c	Yellow Globe for Type 675 Marker Light	90801-1A
5	Roundel Protector, Specify Type and Manufacturer of Light Unit for which desired	Dwg. 879
6	Type 1585-80 Marker Light, with Single Contact, Bayonet Base, lamp receptacle and Red, Fresnel, Lens	1585-80R
6a	Type 1585-80 Marker Light, with Single Contact, Bayonet Base, lamp receptacle and Clear, Fresnel, Lens	1585-80C
7	Phantom Suppressor Kit, complete with Gaskets and Screws	880-311
8	Phantom Suppressor, only	949-1
9	Adaptor Ring, with screws, for applying Phantom Suppressor to Type 818-103 or Type 950A-201 Light Units	880-310

Flashing Light Highway Crossing Signals
Cantilever Type

GENERAL

The increased number of multiple-lane highways which cross railroad tracks at grade has lead to the more extensive use of Cantilever Type Highway Crossing Signals which permit the placing of Flashing Light Units out over the traveled roadway, for greater visibility.

To meet the varying requirements, four standard signals, shown on the following pages, have been designed. Each signal is usually equipped with two-way indication Flashing Light Signals on the dowel mast but, on some divided highways, where traffic moves in only one direction, one-way indication Flashing Lights may be sufficient and will be supplied when so ordered. Flashing Lights, mounted on the main mast, are often required for the protection of highway traffic in the right-hand lane. Ordering references for assemblies so equipped are included in the listings on the following Catalog Plates.

The length of the dowel mast can be increased so as to permit mounting a Railroad Crossing sign over the roadway, above the Flashing Lights, where necessary.

The Standard Cantilever Type Signals provide a vertical clearance of 14' - 0", as prescribed by current regulations and as shown on A.A.R., Signal Section, Drawings No. 1686F and No. 1688D, but extra long main masts will be furnished, on special order, to increase the vertical clearance to 17'- 0". Other variations, to meet special requirements, may also be incorporated.

The main masts of Western Railroad Supply Company's Cantilever Type Signals, with 10 foot and 12 foot brackets, are fitted with CAST STEEL BASES, having 65,000 pounds per square inch tensile strength as compared with 35,000 pounds for the conventional Cast Iron Bases. This factor of 86% greater strength insures the safety of maintenance personnel and a longer service life of the signals.

If signals are to be operated directly from a commercial power source at the commercial voltage, Type 818-103 Flashing Light Units can be furnished in place of the Type 950A-201 Light Units listed for the standard assemblies.

Highway Crossing Signals
Cantilever Type

A607 = 6' -0" Span A580 = 8' -0" Span

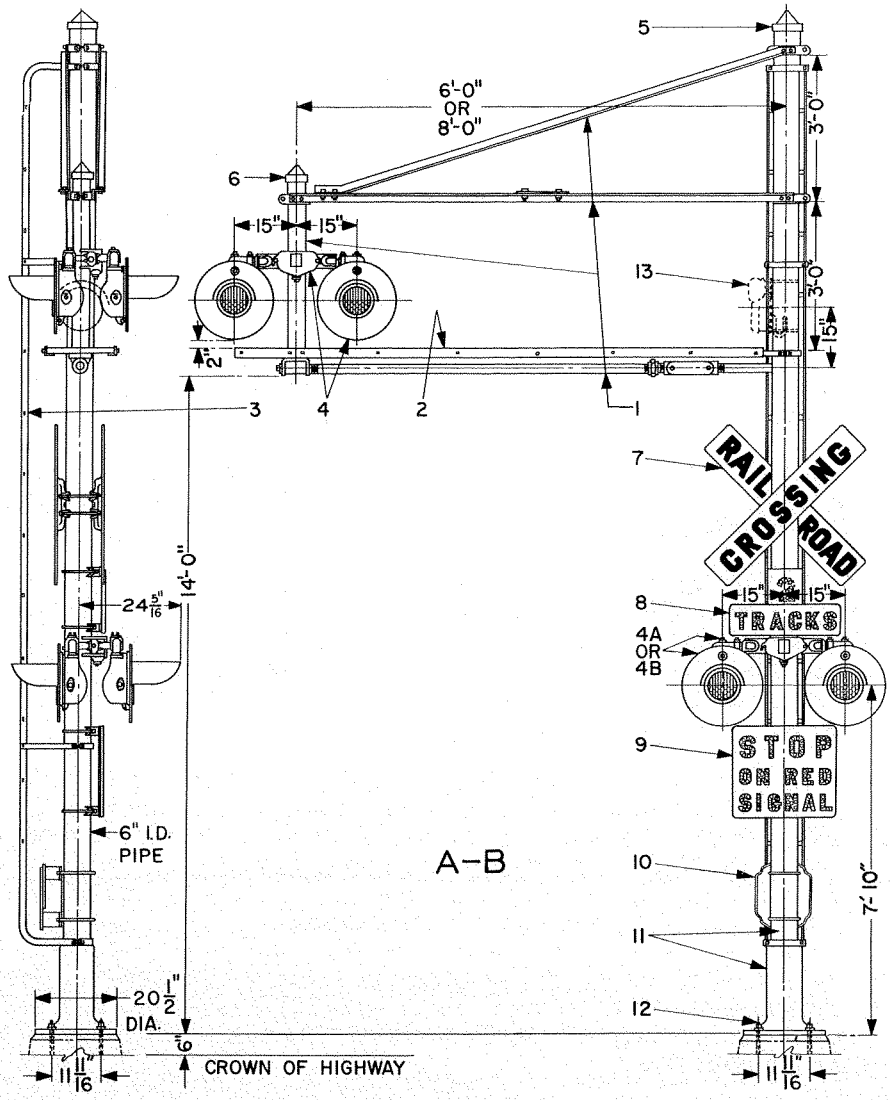

NOTE:

1 - Two-way Indication Flashing Lights will be furnished for Dowel Mast, unless otherwise specified.
2 - Type 222ARP Crossing Bell will be furnished, when required, unless other type is specified. See Catalog Section B.
3 - Anchor Bolts will not be furnished, unless specified.
4 - For Detail Parts for these Assemblies, see Plate D520.

1960

WESTERN RAILROAD SUPPLY COMPANY

Highway Crossing Signals
Cantilever Type

A607 = 6' -0" Span A580 = 8' -0" Span

THE FOLLOWING INFORMATION MUST BE SPECIFIED:

1 - The Numeral required on Number of Tracks Sign.
2 - Type of Signs required, See references 7, 8 and 9, Plate D520.
3 - Voltage and Wattage of Electric Lamps, if required.

NOTE:
No. 5327 Roundels will be furnished for Light Units on Dowel Mast and No. 5323 Roundels for Light Units on Main Mast, unless otherwise specified. (See Listing, Plate D520).

ORDERING REFERENCE

6'-0" Span
Specify Plate D510, Reference Number, Assembly Number and Description.
Description: Highway Crossing Signal, Cantilever Type, 6'-0" Span

Ref. No.	Assembly Number	Junction Box	Crossing Bell	Flashing Lights on Main Mast
A 1	A607-A-1	With	With	None
A 2	A607-A-2	With	Without	None
A 3	A607-A-3	Without	With	None
A 4	A607-A-4	Without	Without	None
A 5	A607-B-1	With	With	One-Way Indication
A 6	A607-B-2	With	Without	One-Way Indication
A 7	A607-B-3	Without	With	One-Way Indication
A 8	A607-B-4	Without	Without	One-Way Indication
A 9	A607-C-1	With	With	Two-Way Indication
A10	A607-C-2	With	Without	Two-Way Indication
A11	A607-C-3	Without	With	Two-Way Indication
A12	A607-C-4	Without	Without	Two-Way Indication

ORDERING REFERENCE

8'-0" Span
Specify Plate D510, Reference Number, Assembly Number and Description.
Description: Highway Crossing Signal, Cantilever Type, 8'-0" Span

Ref. No.	Assembly Number	Junction Box	Crossing Bell	Flashing Lights on Main Mast
B 1	A580-A-1	With	With	None
B 2	A580-A-2	With	Without	None
B 3	A580-A-3	Without	With	None
B 4	A580-A-4	Without	Without	None
B 5	A580-B-1	With	With	One-Way Indication
B 6	A580-B-2	With	Without	One-Way Indication
B 7	A580-B-3	Without	With	One-Way Indication
B 8	A580-B-4	Without	Without	One-Way Indication
B 9	A580-C-1	With	With	Two-Way Indication
B10	A580-C-2	With	Without	Two-Way Indication
B11	A580-C-3	Without	With	Two-Way Indication
B12	A580-C-4	Without	Without	Two-Way Indication

Detail Parts for Cantilever Type Highway Crossing Signals

A607 = 6' - 0" Span A580 = 8' - 0" Span

ORDERING REFERENCE
Specify Plate Number D520, Reference Number and Description

Piece No.	Description	Piece No.
1	Cantilever Bracket and Dowel Mast, 6' -0" Span	6512X
1a	Cantilever Bracket and Dowel Mast, 8' -0" Span	6515
2	Inspection Platform for 6' -0" Span	6512-11X
2a	Inspection Platform for 8' -0" Span	6512-11C
3	Ladder complete with braces and clamps	6050-4
4	Type 950 Flashing Light Signal Unit, Two-way Indication, with No. 5327 Roundels, for 4" I. D. Dowel Mast mounting	950A-204
4a	Type 950 Flashing Light Signal Unit, Two-way Indication, with No. 5323 Roundels, for 6' I. D. Main Mast mounting	950A-204
4b	Type 950 Flashing Light Signal Unit, One-way Indication, with No. 5323 Roundels, for 6" I. D. Main Mast mounting	950A-202
5	Pinnacle, for 6" I. D. Main Mast	110-9
6	Pinnacle, for 4" I. D. Dowel Mast	110-6
	Railroad Crossing Signs (See Catalog Section H for Details)	
7	Railroad Crossing sign, Cast Iron	3320-16
7a	Railroad Crossing sign, Reflector Unit Type, Vitreous Enamel finish	3380-63
7b	Railroad Crossing sign, Reflector Unit Type, Synthetic Enamel finish	3380-64
7c	Railroad Crossing sign, Reflex-Reflecting Type, Sheet steel	3380-606
7d	Railroad Crossing sign, Reflex-Reflecting Type, Extruded Aluminum	3380-706
	Number of Tracks Signs (See Catalog Section H for Details) (Specify Numeral required)	
8	Number of Tracks sign, Cast Iron	16444-16
8a	Number of Tracks sign, Reflector Unit Type, Vitreous Enamel finish	3368-63
8b	Number of Tracks sign, Reflector Unit Type, Synthetic Enamel finish	3368-64
8c	Number of Tracks sign, Reflex-Reflecting Type, sheet Steel	3368-606
8d	Number of Tracks sign, Reflex-Reflecting Type, Extruded Aluminum	3368-706

Continued on next page.

1960

WESTERN RAILROAD SUPPLY COMPANY

Detail Parts for Cantilever Type Highway Crossing Signals

A607 = 6' - 0" Span A580 = 8' - 0" Span

ORDERING REFERENCE
Specify Plate Number D520, Reference Number and Description

Ref. No.	Description	Piece No.
	"STOP ON RED SIGNAL" Signs (See Catalog Section H for Details)	
9	Stop on Red Signal Sign, Reflector Unit Type, Vitreous Enamel finish	3366-63
9a	Stop on Red Signal sign, Reflector Unit Type, Synthetic Enamel finish	3366-64
9b	Stop on Red Signal sign, Reflex-Reflecting Type, sheet steel	3366-606
9c	Stop on Red Signal sign, Reflex-Reflecting Type, sheet Aluminum	3366-706
10	Junction Box, complete with terminals and "U" Bolts	1228-WB6
11	Mast and Base Assembly, for references A1 or B1	6512-50EP
11a	Mast and Base Assembly, for references A2 or B2	6512-50E
11b	Mast and Base Assembly, for references A3 or B3	6512-50BP
11c	Mast and Base Assembly, for references A4 or B4	6512-50B
11d	Mast and Base Assembly, for references A5, A9, B5 or B9	6512-50F
11e	Mast and Base Assembly, for references A6, A10, B6, or B10	6512-50EA
11f	Mast and Base Assembly, for references A7, A11, B7 or B11	6512-50CP
11g	Mast and Base Assembly, for references A8, A12, B8 or B12	6512-50C
12	Anchor Bolt, 1" x 36", with hexagon nut and plain washer	11079
13	Type 222 D. C. Crossing Bell, 12" Gong, with "U" bolts, for mounting on 6" I. D. Pipe Mast, and Flexible conduit	0222ARP

NOTE:

Drawings and Replacement Parts List will be furnished on request, for Cantilever Bracket, Inspection Platform, Conduit, Ladder, or other components not listed above.

Note: Roundels Available for Flashing Lights Units are:
CL-17, 30° Horizontal Spread.
5319, 160° Horizontal Spread, 12° Down Deflection.
5321, 20° Deflecting.
5323, 30° Horizontal Spread, 15° Down Deflection.
5327, 20° Horizontal Spread, 32° Down Deflection.
5332, 70° Horizontal Spread.
5333, Diffusion-deflection Type, With Horizontal and Downward Spread.

Highway Crossing Signals
Cantilever Type

A624

10' -0" Span

12' -0" Span

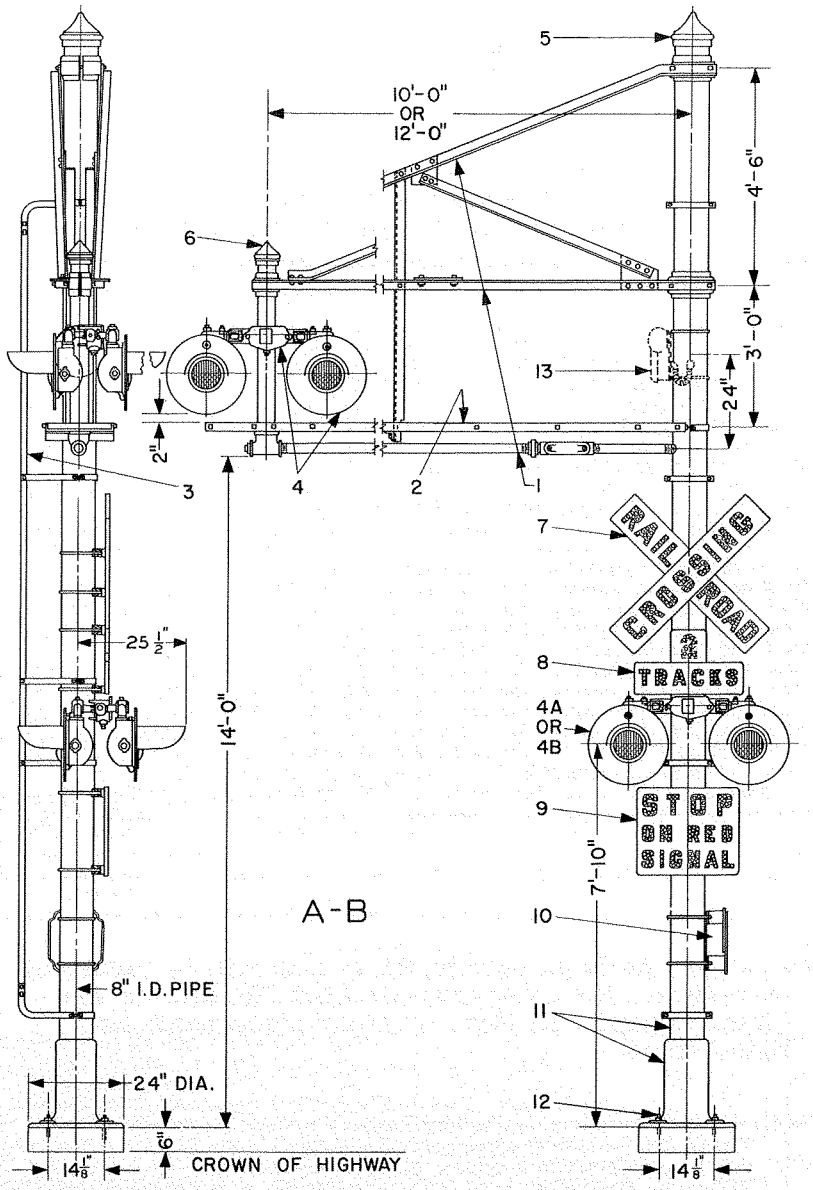

NOTE:

1 - Two-way Indication Flashing Lights will be furnished for Dowel Mast, unless otherwise specified.
2 - Type 222ARP Crossing Bell will be furnished, when required, unless other type is specified. See Catalog Section B.
3 - Anchor Bolts will not be furnished, unless specified.
4 - For Detail Parts for these assemblies, see Plate D540.

1960

WESTERN RAILROAD SUPPLY COMPANY

Highway Crossing Signals
Cantilever Type

A624

10' -0" Span 12' -0" Span

THE FOLLOWING INFORMATION MUST BE SPECIFIED:

1 - **The Numeral required on Number of Tracks Sign.**
2 - Type of Signs required, See references 7, 8 and 9, Plate D540.
3 - Voltage and Wattage of Electric Lamps, if required.

NOTE:
No. 5327 Roundels will be furnished for Light Units on Dowel Mast and No. 5323 Roundels for Light Units on Main Mast, unless otherwise specified. (See Listing, Plate D540).

ORDERING REFERENCE

10'-0" Span
Specify Plate D530, Reference Number, Assembly Number and Description.
Description: Highway Crossing Signal, Cantilever Type, 10'-0" Span

Ref. No.	Assembly Number	Junction Box	Crossing Bell	Flashing Lights on Main Mast
A 1	A624-1A-1	With	With	None
A 2	A624-1A-2	With	Without	None
A 3	A624-1A-3	Without	With	None
A 4	A624-1A-4	Without	Without	None
A 5	A624-1B-1	With	With	One-Way Indication
A 6	A624-1B-2	With	Without	One-Way Indication
A 7	A624-1B-3	Without	With	One-Way Indication
A 8	A624-1B-4	Without	Without	One-Way Indication
A 9	A624-1C-1	With	With	Two-Way Indication
A10	A624-1C-2	With	Without	Two-Way Indication
A11	A624-1C-3	Without	With	Two-Way Indication
A12	A624-1C-4	Without	Without	Two-Way Indication

ORDERING REFERENCE

12'-0" Span
Specify Plate D530, Reference Number, Assembly Number and Description.
Description: Highway Crossing Signal, Cantilever Type, 12'-0" Span

Ref. No.	Assembly Number	Junction Box	Crossing Bell	Flashing Lights on Main Mast
B 1	A624-A-1	With	With	None
B 2	A624-A-2	With	Without	None
B 3	A624-A-3	Without	With	None
B 4	A624-A-4	Without	Without	None
B 5	A624-B-1	With	With	One-Way Indication
B 6	A624-B-2	With	Without	One-Way Indication
B 7	A624-B-3	Without	With	One-Way Indication
B 8	A624-B-4	Without	Without	One-Way Indication
B 9	A624-C-1	With	With	Two-Way Indication
B10	A624-C-2	With	Without	Two-Way Indication
B11	A624-C-3	Without	With	Two-Way Indication
B12	A624-C-4	Without	Without	Two-Way Indication

WESTERN RAILROAD SUPPLY COMPANY

Detail Parts for Cantilever Type Highway Crossing Signals

A624

10' - 0" Span 12' - 0" Span

ORDERING REFERENCE
Specify Plate Number D540, Reference Number and Description

Ref. No.	Description	Piece No.
1	Cantilever Bracket and Dowel Mast, 10' - 0" Span	6509-1
1a	Cantilever Bracket and Dowel Mast, 12' - 0" Span	6508-1
2	Inspection Platform, for 10' - 0" Span	6509-2
2a	Inspection Platform, for 12' - 0" Span	6508-2
3	Ladder complete with Braces and Clamps	6508-5
4	Type 950 Flashing Light Signal Unit, Two-way Indication, with No. 5327 Roundels, for 4" I. D. Dowel Mast mounting	950A-204
4a	Type 950 Flashing Light Signal Unit, Two-way Indication, with No. 5323 Roundels, for 8" I. D. Main Mast mounting	950A-204
4b	Type 950 Flashing Light Signal Unit, One-way Indication, with No. 5323 Roundels, for 8" I. D. Main Mast mounting	950A-202
5	Pinnacle, for 8" I. D. Main Mast	6508-3
6	Pinnacle, for 4" I. D. Dowel Mast	12452
	Railroad Crossing Signs (See Catalog Section H for Details)	
7	Railroad Crossing sign, Cast iron	3320-18
7a	Railroad Crossing sign, Reflector Unit Type Vitreous Enamel finish	3380-83
7b	Railroad Crossing sign, Reflector Unit Type, Synthetic Enamel finish	3380-84
7c	Railroad Crossing sign, Reflex-Reflecting Type, sheet steel	3380-608
7d	Railroad Crossing sign, Reflex-Reflecting Type, Extruded Aluminum	3380-708
	Number of Tracks Signs (See Catalog Section H for Details) (Specify Numeral required)	
8	Number of Tracks sign, Cast Iron	16444-18
8a	Number of Tracks sign, Reflector Unit Type, Vitreous Enamel finish	3368-83
8b	Number of Tracks sign, Reflector Unit Type, Synthetic Enamel finish	3368-84
8c	Number of Tracks sign, Reflex-Reflecting Type, sheet steel	3368-608
8d	Number of Tracks sign, Reflex-Reflecting Type, Extruded Aluminum	3368-708

Continued on next page

WESTERN RAILROAD SUPPLY COMPANY

Detail Parts for Cantilever Type Highway Crossing Signals

A624

10' - 0" Span 12' - 0" Span

ORDERING REFERENCE
Specify Plate Number D540, Reference Number and Description

Ref. No.	Description	Piece No.
	"STOP ON RED SIGNAL" Signs (See Catalog Section H for Details)	
9	Stop on Red Signal sign, Reflector Unit Type, Vitreous Enamel finish	3366-83
9a	Stop On Red Signal sign, Reflector Unit Type, Synthetic Enamel finish	3366-84
9b	Stop On Red Signal sign, Reflex-Reflecting Type, sheet steel	3366-608
9c	Stop On Red Signal sign, Reflex-Reflecting Type, sheet Aluminum	3366-708
10	Junction Box, complete with terminals and "U" Bolts	1228-WB8
11	Mast and Base Assembly, for references A1 or B1	6508-4R
11a	Mast and Base Assembly, for references A2 or B2	6508-4
11b	Mast and Base Assembly, for references A3 or B3	6508-4J
11c	Mast and Base Assembly, for references A4 or B4	6508-4B
11d	Mast and Base Assembly, for references A5, A9, B5 or B9	6508-4L
11e	Mast and Base Assembly, for references A6, A10, B6 or B10	6508-4GX
11f	Mast and Base Assembly, for references A7, A11, B7 or B11	6508-4DB
11g	Mast and Base Assembly, for references A8, A12, B8 or B12	6508-4A
12	Anchor Bolt, 1 1/4" x 42" long, with hexagon nut and plain washer	2152
13	Type 222 D. C. Crossing Bell, 12" Gong, with "U" bolts, for mounting on 8" I. D. Pipe Mast, and Flexible Conduit	0222ARP

NOTE:

Drawings and Replacement Parts List will be furnished on request, for Cantilever Bracket, Inspection Platform, Conduit, Ladder or other component not listed above.

Note: Roundels Available for Flashing Lights Units are:
CL-17, 30° Horizontal Spread.
5319, 160° Horizontal Spread, 12° Down Deflection.
5321, 20° Deflecting.
5323, 30° Horizontal Spread, 15° Down Deflection.
5327, 20° Horizontal Spread, 32° Down Deflection.
5332, 70° Horizontal Spread.
5333, Diffusion-deflection Type, With Horizontal and Downward Spread.

W RRS

Section
D

PART NO. 2

REPLACEMENT PARTS ONLY

for

Crossing Signal Light Units

and

Junctionbox Crossarms

of Design No Longer Manufactured

(See Section D for Current Designs)

WESTERN RAILROAD SUPPLY COMPANY

DIVISION OF WESTERN INDUSTRIES, INC.

MANUFACTURERS

GENERAL OFFICES and FACTORY

2742 WEST 36TH PLACE CHICAGO 32, ILLINOIS

District Offices in

NEW YORK 7 PHILADELPHIA 2 SAN FRANCISCO 5

ST. LOUIS 1 HOUSTON 23 MONTREAL 3

Printed in U.S.A.

3M-1960

Section D

PART No. 2

CONTENTS

REPLACEMENT PARTS FOR

Type 818 Crossing Signal Light Unit ..... Plate D180

Type 880-1 Crossing Signal Light Unit ..... Plate D280

Type 880-201 Crossing Signal Light Unit ..... Plate D280A

Type 865 Junctionbox Crossarm..... Plate D290

Type 950-1 Crossing Signal Light Unit ..... Plate D380

Type 2800 Vertical Illuminated STOP Sign..... Plate D430

Type 2801 Vertical Illuminated STOP Sign..... Plate D430

References for current designs of Crossing Signal Light Units, STOP Signs, NO TURN Signs, Flashing Light Highway Crossing Signals and related items will be found in Catalog Section D, issue of 1960.

Blue Prints and Parts Lists will be furnished upon request, covering similar discontinued items not found herein.

Roundels Available for Flashing Light Units are:

CL-17,	30° Horizontal Spread.
5319,	160° Horizontal Spread, 12° Down Deflection.
5321,	20° Deflecting.
5323,	30° Horizontal Spread, 15° Down Deflection.
5327,	20° Horizontal Spread, 32° Down Deflection.
5332,	70° Horizontal Spread.
5333,	Diffusion-deflection Type, With Horizontal and Downward Spread.

Type 818 Crossing Signal Light Units

(Single Contact, Bayonet Base, Receptacle)

REPLACEMENT PARTS ONLY

(Manufacture Discontinued)

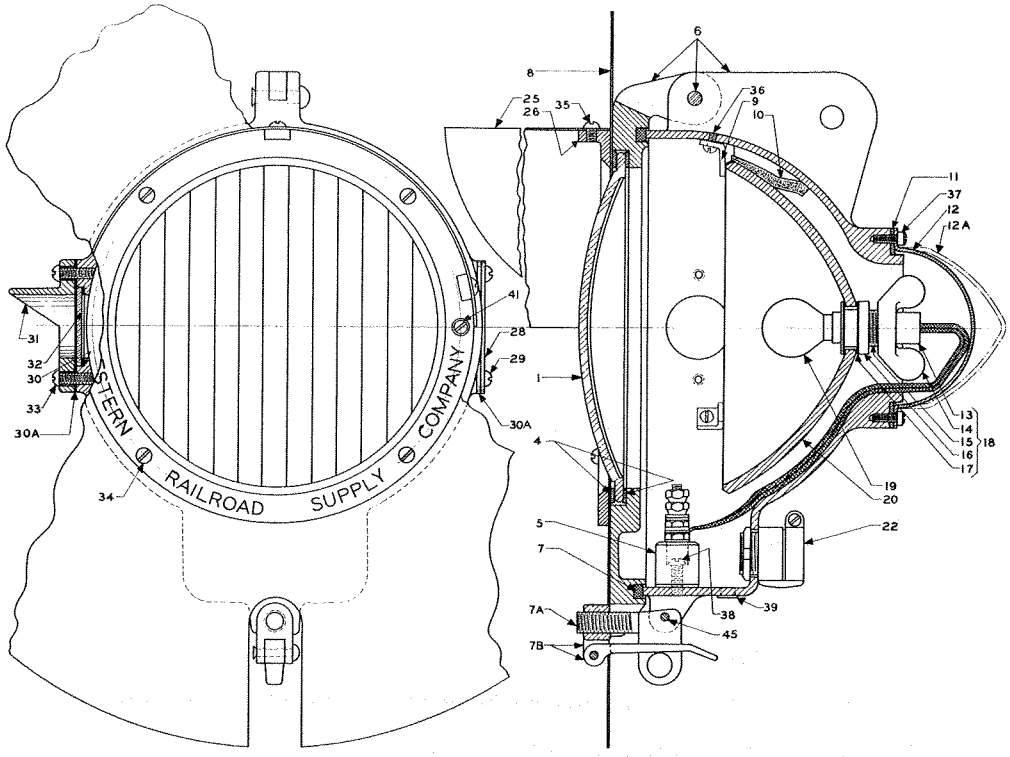

NOTE:

1 - For ordering references for replacement parts for this Light Unit, see following Page.

2 - For ordering references for replacement parts for the Type 818-103 Light Unit, with Medium Screw Base Receptacle, see Plate D180A in Catalog Section D.

1960

WESTERN RAILROAD SUPPLY COMPANY

Type 818 Crossing Signal Light Units

(Single Contact, Bayonet Base, Receptacle)

REPLACEMENT PARTS ONLY

(Manufacture Discontinued)

ORDERING REFERENCE
Specify Plate Number D180, Reference Number and Description

Ref. No.	Description	Piece No.
1	Roundel, as specified, (See Listing, Page 3)	
4	Roundel Gasket	825
5	Terminal Block, complete	1056-19
6	Case and Door, assembly	818-12
7	Packing, for door	818-18
7A	Hasp Eye Bolt	1410-11
7B	Locking Hasp and Nut, assembly	1410-31
8	Background	5312
9	Mirror Retaining Clip	858
10	Reflector Pad	880-15
11	Cap Gasket	803-7
12	Spun Aluminum Cap	803-8
12A	Large Cap, for lights with extra long receptacle	803-4
13	Lamp Receptacle	6001-2
14	Winged Clamp Nut	818-42
15	Receptacle Clamp Bushing	818-41
16	Spanner Nut	818-43
17	Fibre Washer, for clamp bushing	818-44
18	Lamp Receptacle, complete	818-46
19	Lamp, single contact, bayonet base, Specify Voltage & Wattage	
20	Parabolic Glass Reflector	832
22	Squeeze Connector, 3/4", straight	
25	Hood	823-1
26	Roundel Retaining Ring	802-1
28	Side Light Blank Cover	801-3
29	Machine Screw, 1/4"-20 x 1/2" long, Round Head, Brass	
30	Side Light Glass Gasket	818-48
30A	Side Light Hood Gasket	801-2
31	Side Light Hood	880-23
32	Side Light Glass Disc	811
33	Machine Screw, 1/4"-20 x 3/4" long, Round Head, Brass	
34	Machine Screw, #10-32 x 5/8" long, Round Head, Brass	
35	Machine Screw, 1/4"-20 x 3/8" long, Round Head, Brass	
36	Machine Screw, #8-32 x 5/16" long, Round Head, Brass	
37	Machine Screw, #10-32 x 1/2" long, Round Head, Brass	
38	Machine Screw, #10-32 x 5/8" long, Round Head, Brass	
39	Ventilator	818-49
41	Machine Screw, #10-32 x 3/8" long, Fillister Head, Brass	
45	Rivet, 1/4" x 1 1/4" long, Round Head, Brass	
46	Flexible Conduit, 3/4" x 16" long	818-51

Type 880-1 Crossing Signal Light Unit

(Single Contact, Bayonet Base, Receptacle)

REPLACEMENT PARTS ONLY

(Manufacture Discontinued)

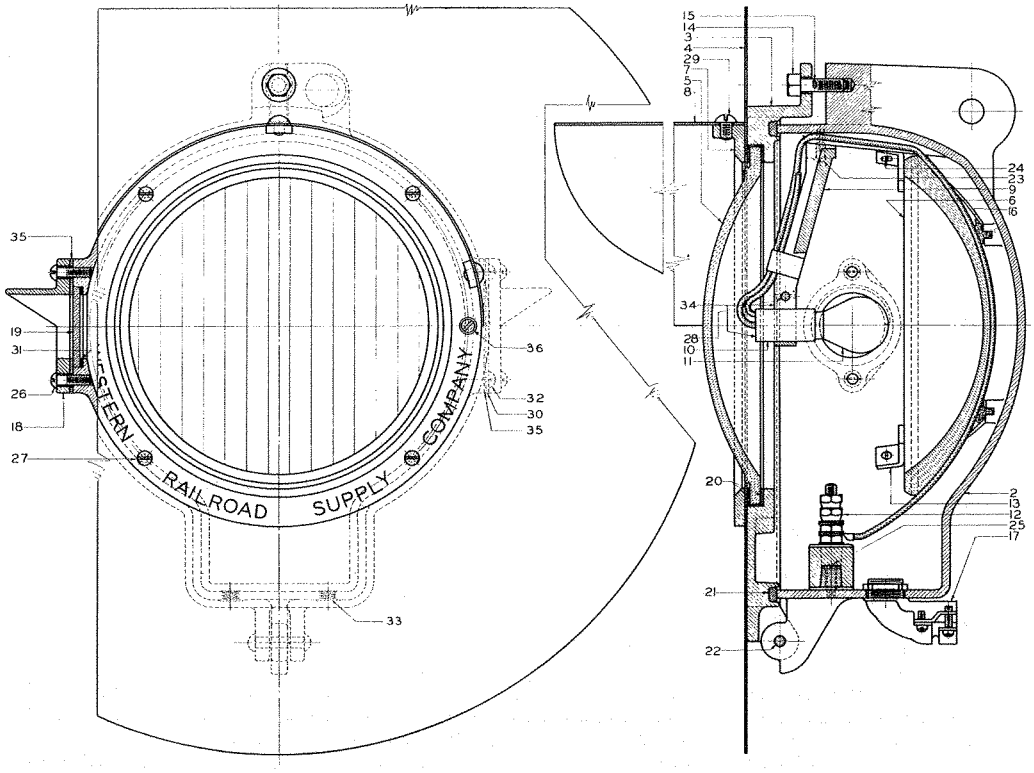

NOTE:

1 - For ordering references for replacement parts for this Light Unit see following page.

2 - For ordering references for replacement parts for New Design, Type 880-201 see second and third following pages, herein.

1960

WESTERN RAILROAD SUPPLY COMPANY

Type 880-1 Crossing Signal Light Unit

(Single Contact, Bayonet Base, Receptacle)

REPLACEMENT PARTS ONLY

(Manufacture Discontinued)

ORDERING REFERENCE

Specify Plate Number D280, Reference Number and Description

Ref. No.	Description	Piece No.
2	Case	880-11
3	Door	880-12
4	Background	880-13
5	Roundel, as specified, (See Listing, Page 3)	
6	Mangin Mirror Reflector	822
7	Roundel Retaining Ring	802-1
8	Hood	823-1
9	Lamp Bracket, also included in Ref. No. 34	844
10	Lamp Receptacle, also included in Ref. No. 34	6001-1
11	Lamp, S. C. B. B., Specify Voltage and Wattage	
12	Porcelain Terminal, also included in Ref. No. 34	1056-19
13	Reflector Retaining Clip	880-14
14	Locking Screw	880-16
15	Cotter Pin, steel, 1/16" x 3/4" long	
16	Reflector Pad	880-15
17	Squeeze Connector, 1/2" - 90°	
18	Side Light Hood	880-23
19	Side Light Glass Disc	811
20	Roundel Gasket	825
21	Packing, for door	880-18
22	Rivet, for hinge pin, 1/4" x 1 1/4" long, Round Head, Brass	
23	Machine Screw, #10-32 x 3/4" long, Round Head, Brass	
24	Machine Screw, #8-32 x 5/16" long, Round Head, Brass	
25	Machine Screw, #10-32 x 5/8" long, Round Head, Brass	
26	Machine Screw, 1/4"-20 x 3/4" long, Round Head, Brass	
27	Machine Screw, #10-32 x 5/8" long, Round Head Brass	
28	Thumb Screw, #10-32 x 5/8" long	
29	Machine Screw, 1/4"-20 x 3/8" long, Round Head Brass	
30	Side Light Blank Cover	801-3
31	Side Light Gasket, for glass Disc	818-48
32	Machine Screw, 1/4"-20 x 1/2" long, Round Head Brass	
33	Ventilator	818-49
34	Lamp Bracket with Receptacle and Terminal, assembly	880-19
35	Side Light Hood Gasket	801-2
36	Machine Screw, #10-32 x 3/8" long, Fillister Head, Brass	

1941

WESTERN RAILROAD SUPPLY COMPANY

Type 880-201 Crossing Signal Light Unit

IMPROVED DESIGN

REPLACEMENT PARTS ONLY

(Manufacture Discontinued)

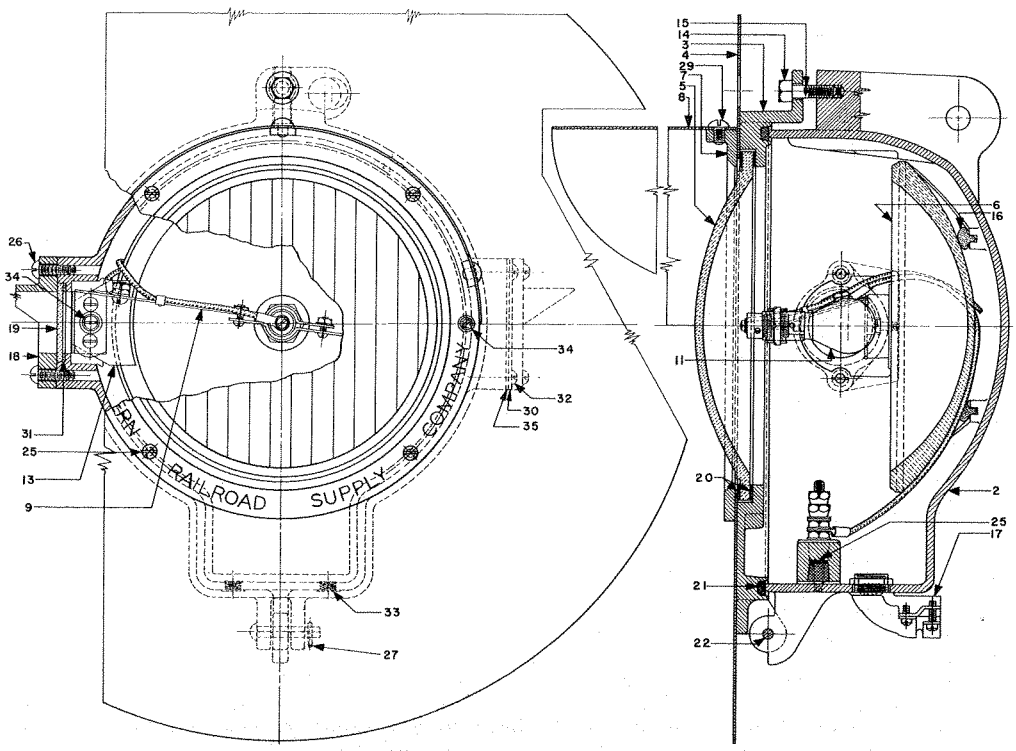

NOTE:

For ordering references for replacement parts for this light unit see following page.

For ordering references for replacement parts for the "Old Design" of Type 880-1 Light Units see Plate D280, herein.

1941

WESTERN RAILROAD SUPPLY COMPANY

Type 880-201 Crossing Signal Light Units

IMPROVED DESIGN

REPLACEMENT PARTS ONLY

(Manufacture Discontinued)

ORDERING REFERENCE

Specify Plate Number D280A, Reference Number and Description

Ref. No.	Description	Piece No.
2	Case	880-11A
3	Door	880-12
4	Background	880-13
5	Roundel, as specified. (see Listing Page 3)	
6	Mangin Mirror Reflector	822
7	Roundel Retaining Ring	802-1
8	Hood	823-1
9	Lamp Bracket and Receptacle	950-250A
9a	Lamp Receptacle and Adjusting Nut Only	950-255
11	Lamp, S. C. B. B., (Specify Voltage and Wattage)	
13	Reflector Retaining Plate	880-211
14	Locking Screw	880-16
15	Cotter Pin, 1/16" x 3/4" long, steel	
16	Reflector Pad	880-15
17	Squeeze Connector, 1/2", 90°	
18	Side Light Hood	880-23
19	Side Light Glass Disc	811
20	Roundel Gasket	825
21	Door Packing	880-18
22	Hinge Pin, Brass	950-259
25	Machine Screw, #10-32 x 5/8" long, Round Head, Brass	
26	Machine Screw, 1/4"-20 x 3/4" long, Round Head, Brass	
27	Cotter Pin, 3/32" x 5/8" long, Brass	
29	Machine Screw, 1/4"-20 x 3/8" long, Round Head, Brass	
30	Sidelight Blanking Plate	801-3
31	Sidelight Gasket	818-48
32	Machine Screw, 1/4"-20 x 1/2" long, Round Head Brass	
33	Ventilator	818-49
34	Machine Screw, #10-32 x 3/8" long, Fillister Head Brass	
35	Gasket for Light units with blanked sidelights	801-2

Type 865 Junctionbox Crossarm

REPLACEMENT PARTS ONLY

(Manufacture Discontinued)

The Type 865 Junctionbox Crossarm was formerly supplied for mounting Crossing Signal Light Units, Types 806, 818-1, 880 and 880-1.

For Complete Junctionbox Crossarm for mounting these types of Light Units see Type 950-818, Plate D170A, in Catalog Section D, issue of 1960.

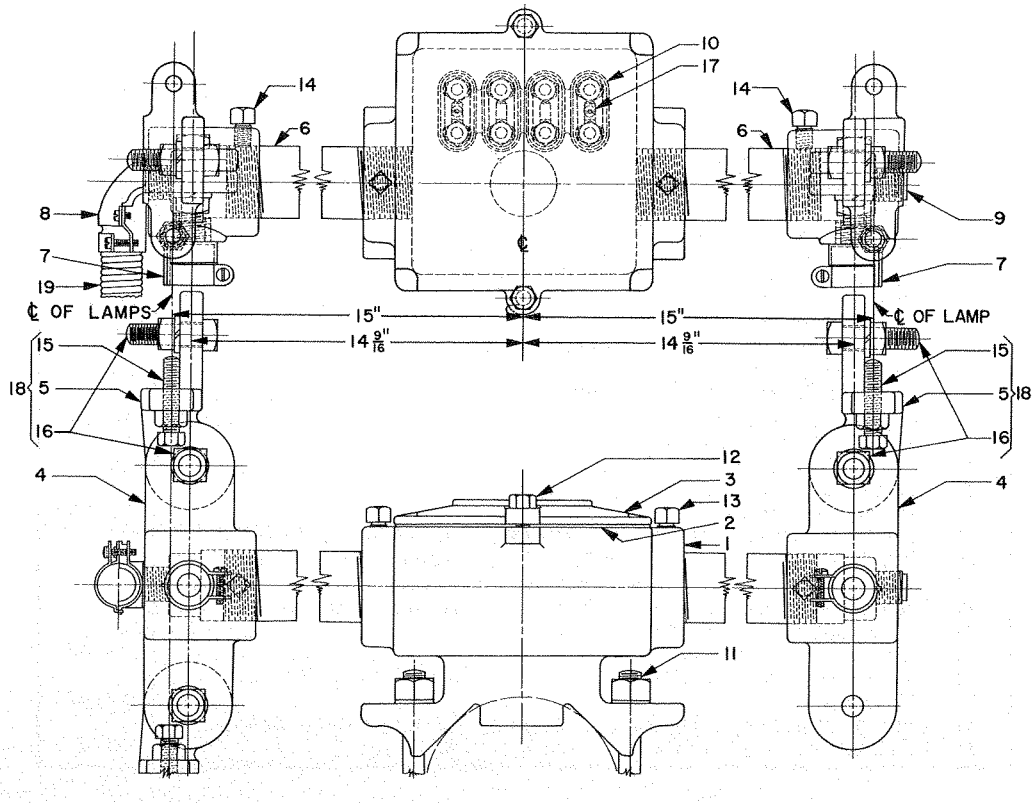

For ordering references for replacement parts for this Junctionbox Crossarm, see following page.

1937

WESTERN RAILROAD SUPPLY COMPANY

Type 865 Junctionbox Crossarm

REPLACEMENT PARTS ONLY

(Manufacture Discontinued)

ORDERING REFERENCE
Specify Plate Number D290, Reference Number and Description

Ref. No.	Description	Piece No.
1	Junctionbox	864-1
2	Gasket	866-1
3	Cover	859-1
4	Adaptor, tapped for 1/2" squeeze connector	865-1
4A	Adaptor, tapped for 3/4" squeeze connector	865-1A
5	Link	807
6	Pipe Extension	865-9
7	Squeeze Connector, Straight, for 1/2" flexible conduit	
7A	Squeeze Connector, Straight, for 3/4" flexible conduit	
8	Squeeze Connector, 90° for 1/2" flexible conduit	
8A	Squeeze Connector, 90° for 3/4" flexible conduit	
9	Pipe Plug, 1/2"	
9A	Pipe Plug, 3/4"	
10	Terminal Block, with 8 Binding Posts	2506-14
11	"U" Bolt, with nuts and washers, for 4" I. D. Pipe Mast	865-6
11A	"U" Bolt, with nuts and washers, for 5" I. D. Pipe Mast	865-7
11B	"U" Bolt, with nuts and washers, for 3 1/2" I. D. Pipe Mast	865-8
12	Cap Screw, 5/16" -18 x 7/8" long, Hexagon Head, Steel	
13	Set Screw, 3/8" -16 x 3/4" long, Square Head, Cup Point	
14	Set Screw, 5/16" -18 x 5/8" long, Square Head, Cup Point	
15	Cap Screw, with Hexagon Nut, 3/8" -16 x 1-3/4" long, Hexagon Head, Steel	
16	Bolt, with Square Nut and Lock Washer, 1/2" -13 x 1 3/4" long, Square Head, Steel	
17	Machine Screw, #8-32 x 3/4" long, Round Head, Brass	
18	Link Assembly, complete, includes Ref. No. 5, 15 and 16	807-1
19	Flexible Metalic Conduit, 1/2" x 16" long	880-22
19A	Flexible Metalic Conduit, 3/4" x 16" long	818-51

NOTE:
For complete Junctionbox Crossarm substitute for Type 865, see Type 950-818, Plate D170A, in Catalog Section D, issue of 1960.

1937

WESTERN RAILROAD SUPPLY COMPANY

Type 950-1 Crossing Signal Light Unit

ORIGINAL DESIGN

REPLACEMENT PARTS ONLY

(Manufacture Discontinued)

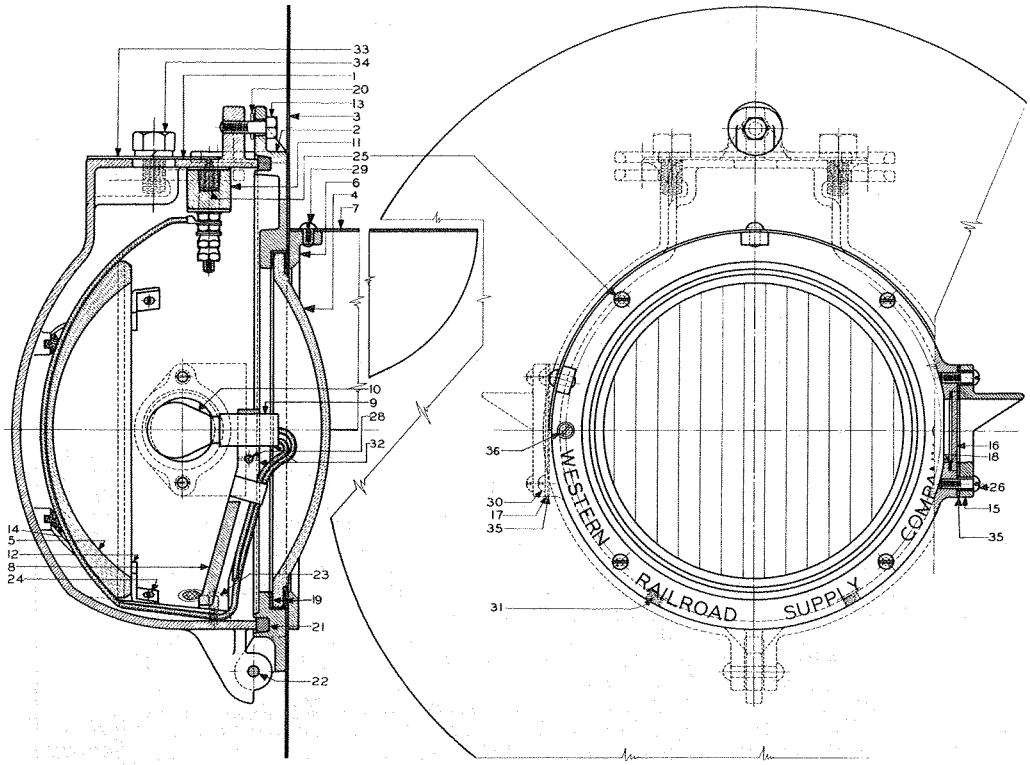

NOTE:

1 - For replacement parts for this Light Unit see following page.

2 - For replacement parts for current design of Type 950-201 Light Unit see Plate D380A in Section D, issue of 1960.

1937

WESTERN RAILROAD SUPPLY COMPANY

Type 950-1 Crossing Signal Light Unit

ORIGINAL DESIGN

REPLACEMENT PARTS ONLY

(Manufacture Discontinued)

ORDERING REFERENCE

Specify Plate Number D380, Reference Number and Description

Ref. No.	Description	Piece No.
1	Case	950-11
2	Door	950-12
3	Background	950-13
4	Roundel, as specified, (see Listing, Page 3)	
5	Mangin Mirror Reflector	822
6	Roundel Retaining Ring	802-1
7	Hood	823-1
8	Lamp Bracket	844
9	Lamp Receptacle	6001-1
10	Lamp Bulb, S. C. B. B., (Specify Voltage and Wattage)	
11	Porcelain Terminal	1056-19
12	Reflector Retaining Clip	880-14
13	Locking Screw	880-16
14	Reflector Pad	880-15
15	Side Light Hood	880-23
16	Side Light Glass Disc	811
17	Sidelight Blanking Plate	801-3
18	Sidelight Gasket	818-48
19	Roundel Gasket	825
20	Cotter Pin, 1/16" x 3/4" long, steel	
21	Door Packing	880-18
22	Hinge Pin, Rivet, 1/4" x 1 1/4" long, Round Head, Brass	
23	Machine Screw, #10-32 x 3/4" long, Round Head, Brass	
24	Machine Screw, #8-32 x 5/16" long, Round Head, Brass	
25	Machine Screw, #10-32 x 5/8" long, Round Head, Brass	
26	Machine Screw, 1/4"-20 x 3/4" long, Round Head, Brass	
28	Thumb Screw, #10-32 x 5/8" long, Brass	
29	Machine Screw, 1/4"-20 x 3/8" long, Round Head, Brass	
30	Machine Screw, 1/4"-20 x 1/2" long, Round Head, Brass	
31	Ventilator	818-49
32	Lamp Receptacle, Bracket and Terminal Assembly	880-19
33	Gasket	950-17
34	Cap Screw, 1/2" x 1 1/4" long, with lock washer, Hex. Head	
35	Sidelight Hood Gasket	801-2
36	Machine Screw, #10-32 x 3/8" long, Fillester Head, Brass	

WESTERN RAILROAD SUPPLY COMPANY

Vertical Illuminated STOP Signs

WITH PARABOLIC GLASS REFLECTORS

Type 2800 with Single Contact, Bayonet Base, Receptacles
Type 2801 with Medium Screw Base Receptacles

REPLACEMENT PARTS ONLY
(Manufacture Discontinued)

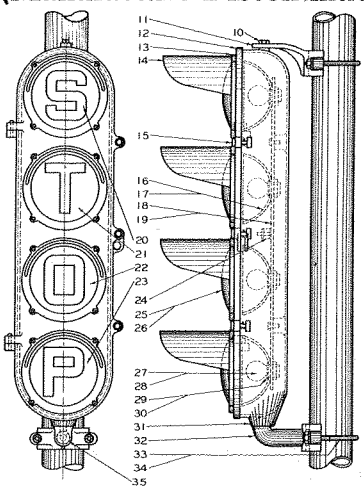

ORDERING REFERENCE

Specify Plate Number D430, Reference Number and Description

Ref. No.	Description	Piece No.
10	Cap screw with iron washer	
11	Top support	2805
12	Door	2802–1
13	Roundel retaining ring	2954
14	Hood	2821
15	Locking bolt with theft resisting cup washer, iron washer, and cotter pin	2806–1
16	Parabolic glass reflector (for Type 2800 Unit only)	832
17	Parabolic glass reflector (for Type 2801 Unit only)	2850–10
18	Reflector support (for Type 2800 Unit only)	2810
19	Reflector support (for Type 2801 Unit only)	2807
20	Sand-blasted glass letter "S"	2856
20a	Metal cutout letter "S"	1806–626
21	Sand-blasted glass letter "T"	2857
21a	Metal cutout letter "T"	1806–627
22	Sand-blasted glass letter "O"	2858
22a	Metal cutout letter "O"	1806–628
23	Sand-blasted glass letter "P"	2859
23a	Metal cutout letter "P"	1806–629
24	Terminal block	1056–10
25	Red convex roundel	
26	Red flat roundel	
29	Assembly of lamp receptacle and bushing for Type 2800 Unit	2850–1
30	Assembly of lamp receptacle and bushing for Type 2801 Unit	2820–1
31	Housing	2803–1
32	Bottom bracket	2804
33	U-bolt for 4″ I.D. pipe post complete with nuts and washers	1207–1
34	U-Bolt for 5″ I.D. pipe post complete with nuts and washers	1207–2
34a	U-Bolt for 3½″ I.D. pipe post complete with nuts and washers	1207–3
35	Seal packing ring	2864

NOTE:

For ordering references for new design, with Mangin Mirror reflectors See Plate D430A in Catalog Section D, Issue of 1960.

W RRS